4” Outdoor Dome Series Hardware Manual

D71, D72, D81, D82, E71, E72, E73, E74, E81, E82, E83, E84, E85, E86, E87

2013/07/10

ACTi
Connecting Vision

Table of Contents

Precautions

Read these instructions

You should read all the safety and operating instructions before using this product.

Heed all warnings

You must adhere to all the warnings on the product and in the instruction manual. Failure to follow the safety instruction given may directly endanger people, cause damage to the system or to other equipment.

Servicing

Do not attempt to service this video device yourself as opening or removing covers may expose you to dangerous voltage or other hazards. Refer all servicing to qualified service personnel.

Trademarks

All names used in this manual are probably registered trademarks of respective companies.

Liability

Every reasonable care has been taken during the writing of this manual. Please inform your local office if you find any inaccuracies or omissions. We cannot be held responsible for any typographical or technical errors and reserve the right to make changes to the product and manuals without prior notice.

Federal Communications Commission Statement

This equipment has been tested and found to comply with the limits for a class B digital device, pursuant to Part 15 of the FCC Rules. These limits are designed to provide reasonable protection against harmful interference in a residential installation. This equipment generates, uses, and can radiate radio frequency energy and, if not installed and used in accordance with the instructions, may cause harmful interference to radio communications. However, there is no guarantee that interference will not occur in a particular installation. If this equipment does cause harmful interference to radio or television reception, which can be determined by turning the equipment off and on, the user is encouraged to try to correct the interference by one or more of the following measures:

- Reorient or relocate the receiving antenna.
- Increase the separation between the equipment and receiver.
- Connect the equipment into an outlet on a circuit different from that to which the receiver is connected.
- Consult the dealer or an experienced radio/TV technician for help.

Warning: Changes or modifications to the equipment that are not expressly approved by the responsible party for compliance could void the user's authority to operate the equipment.

European Community Compliance Statement

This product has been tested and found to comply with the limits for Class B Information Technology Equipment according to European Standard EN 55022 and EN 55024. In a domestic environment, this product may cause radio interference in which cause the user may be required to take adequate measures.

Safety Instructions

Cleaning

Disconnect this video product from the power supply before cleaning.

Attachments

Do not use attachments not recommended by the video product manufacturer as they may cause hazards.

Do not use accessories not recommended by the manufacturer

Only install this device in a dry place protected from weather

Servicing

Do not attempt to service this video product yourself. Refer all servicing to qualified service personnel.

Damage Requiring service

Disconnect this video product from the power supply immediately and refer servicing to qualified service personnel under the following conditions.

1) When the power-supply cord or plug is damaged
2) If liquid has been spilled, or objects have fallen into the video product.
3) If the inner parts of video product have been directly exposed to rain or water.
4) If the video product does not operate normally by following the operating Instructions in this manual. Adjust only those controls that are covered by the instruction manual, as an improper adjustment of other controls may result in damage, and will often require extensive work by a qualified technician to restore the video product to its normal operation.

Safety Check

Upon completion of any service or repairs to this video product, ask the service technician to perform safety checks to determine if the video product is in proper operating condition.

Introduction

The List of Models

This hardware manual contains the following models:

D71		1MP Outdoor Dome with D/N, IR, Fixed lens
D72		3MP Outdoor Dome with D/N, IR, Fixed lens
D81		1MP Outdoor Dome with D/N, IR, Vari-focal lens
D82		3MP Outdoor Dome with D/N, IR, Vari-focal lens
E71		1MP Outdoor Dome with D/N, IR, Basic WDR, Fixed lens
E72		3MP Outdoor Dome with D/N, IR, Basic WDR, Fixed lens
E73		5MP Outdoor Dome with D/N, IR, Basic WDR, Fixed lens
E74		3MP Outdoor Dome with D/N, IR, Superior WDR, Fixed lens
E81		1MP Outdoor Dome with D/N, IR, Basic WDR, Vari-focal lens
E82		3MP Outdoor Dome with D/N, IR, Basic WDR, Vari-focal lens
E83		5MP Outdoor Dome with D/N, IR, Basic WDR, Vari-focal lens
E84		2MP Outdoor Dome with D/N, IR, Basic WDR, SLLS, Vari-focal lens
E85		1MP Outdoor Dome with D/N, IR, Superior WDR, Vari-focal lens
E86		3MP Outdoor Dome with D/N, IR, Superior WDR, Vari-focal lens
E87		1.3MP Outdoor Dome with D/N, IR, Extreme WDR, SLLS, Vari-focal lens

From the installation perspective these models are very similar; therefore you can use one manual for all of them.

Package Contents

D7x / D8x / E7x / E8x Series

Camera (D7x / E7x Series)		Camera (D8x / E8x Series)
	or	

Mounting Screw Kit	Conduit Gland	Drill Template
		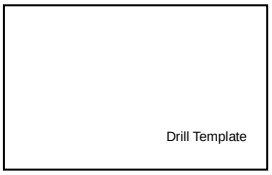

Quick Installation Guide	Warranty Card	Lens Focus Tuner (for D7x / E7x series only)
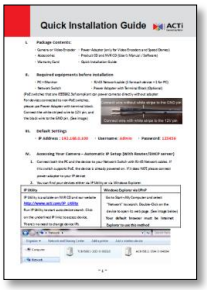	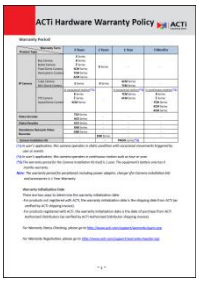	

Hexagon Screwdriver (Available in select models only)		
		

Physical Description

1 Reset Button
2 MicroSDHC Card Slot
3 Ethernet Port
4 Conduit Hole

1) Reset Button

The purpose of reset button is to restore the factory default settings of the camera, including the administrator's password.

The reset button can be used for following purposes:

1. The administrator's password has been forgotten and therefore the camera cannot be accessed.
2. In case of IP address, mask, or allow/deny filter related issues, resulting with inability to modify these settings.
3. In case of connectivity issues or abnormal video quality.

How to do the reset properly?

Press and hold the reset button for 5 seconds.

2) Micro SDHC Card Slot

Insert a microSDHC card into this slot for local recording. For more information on how to use the MicroSDHC card, please refer to the Firmware Manual.

3) Ethernet Port

Connects to a network using an Ethernet cable.

4) Conduit Hole

Conduit holes are openings where cables pass through. There are two conduit holes on this device, used for different mounting angles.

Installation Procedures

There are several mounting options that you can use to install the camera. Select the most suitable solution for your installation environment.

Mounting Options

Mount Types	Accessories
Surface Mount	Suitable when mounting the camera directly walls or ceilings without extra accessories. See ***Mounting on a Flat Surface*** on page 13 for mounting instructions.
Flush Mount	Suitable when mounting the camera discretely above dropped ceilings wherein only the dome cover will be visible underneath the ceiling.
	PMAX-1003 
Pendant Mount	Suitable when mounting the camera on hard and high ceilings.
	PMAX-0101  + PMAX-0103 (Straight Tube with Bracket) 
	PMAX-0101  + PMAX-0102 (Straight Tube) 

Straight Wall Mount	Suitable when mounting the camera on straight walls.		
	PMAX-0308 (L-Type Wall Mount) 		
	PMAX-0101 	PMAX-0305 (Heavy Duty Wall Mount) 	
	PMAX-0101 	PMAX-0302 (Gooseneck with Bracket) 	
	PMAX-0101 	PMAX-0303 (Gooseneck) 	
Vertical Pole Mount	Suitable when mounting the camera on vertical poles.		
	PMAX-0101 	PMAX-0303 	PMAX-0503 
	PMAX-0101 	PMAX-0305 	PMAX-0503 

Horizontal Pole Mount	Suitable when mounting the camera on horizontal poles.		
	PMAX-0101	PMAX-0102	PMAX-0503
			
Corner Mount	Suitable when mounting the camera on a corner wall.		
	PMAX-0101	PMAX-0303	PMAX-0402
			
	PMAX-0101	PMAX-0305	PMAX-0402
			

Other Mounting Accessories

Accessories	
PMAX-0104 (Extension Tube)	
	

NOTE:

- For more information about the mounting solutions and accessories, please check the *Mounting Accessory Selector* in our website (http://www.acti.com/mountingselector).
- The above mounting accessories are not included in the package. Contact your sales agents to purchase.

Mounting on a Flat Surface

Use this mounting solution to install the camera on a flat surface such as a hard or dropped ceiling and straight or tilted walls.

Step 1: Drill the Holes

1. Using the supplied drill template, mark the screw holes location on the surface, then drill the holes and insert the plastic plugs.

2. Determine how the network cable will be routed: ***pass through the surface*** or ***along the surface***.
   - ***If the network cable will pass through the surface***:
     a. Mark and drill the conduit hole location on the surface as shown on the drill template.

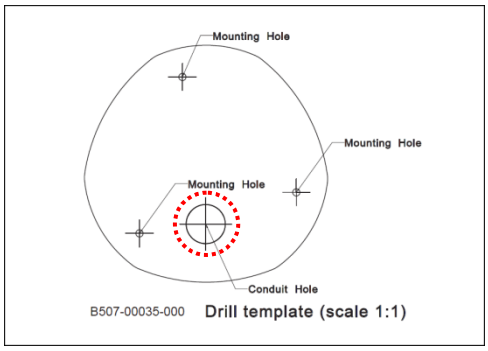

     b. Remove the metal cap covering the bottom conduit hole of the camera, and attach the cap to the side conduit hole to close it. Route the network cable to pass this hole from the surface.

   - ***If the network cable will be routed along the surface***, skip to the next step.

Step 2: Open the Dome Cover

1. Remove the plastic covering the camera.
2. Loosen the three (3) screws securing the dome cover.

3. Carefully lift to open the dome cover and place it on the side of the camera.

   NOTE: Do not abruptly lift the dome cover; it is attached to the camera with a spring wire.

Step 3: Prepare for Waterproof Installation

1. Prepare the following materials for waterproof installation:

Conduit Gland (included in the camera package)	**Flexible Conduit** 3/4" Trade size (not included in the package)	**Network Cable** CAT 5 or CAT 6 (not included in the package)
		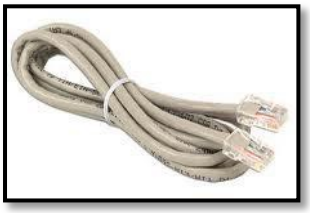

2. Disassemble the bundled conduit gland as shown below:

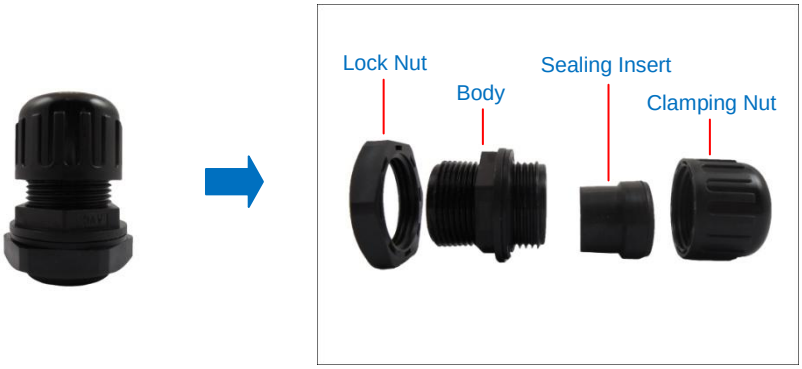

NOTE: In this installation, the conduit gland body can be securely attached to the mount kit; therefore the use of lock nut is not necessary. Please set the lock nut aside.

3. Pull the network cable through the flex conduit.

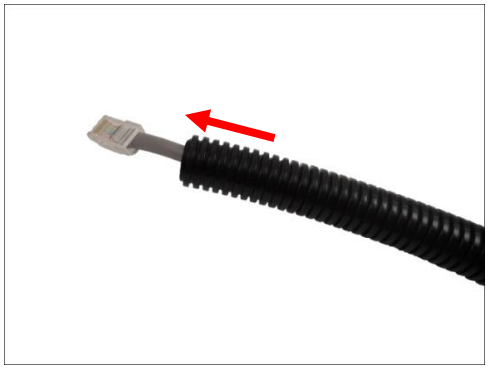

4. Insert the clamping nut through the flex conduit.

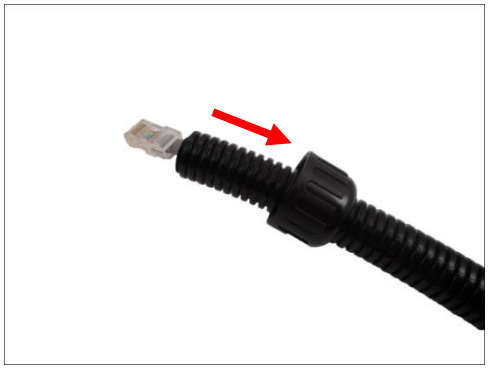

5. Insert the sealing insert and attach it at the end of the flex conduit.

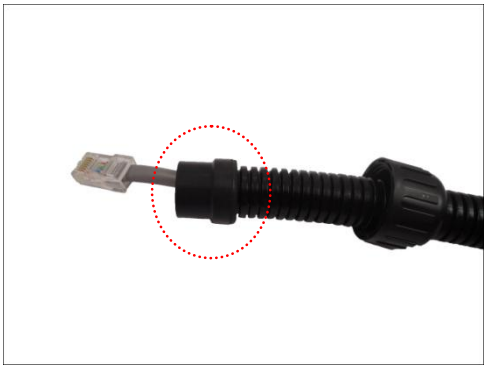

6. Screw the conduit gland body to the conduit hole of the camera.

Attach to Side Conduit Hole

or

Attach to Bottom Conduit Hole

7. ***If the cable will be routed along the surface,*** skip this step. ***If the cable will pass through the surface***, do the following:
   a. Pull the network cable through the bottom conduit hole.

   b. Insert the sealing nut into the conduit gland body and then attach the clamping nut to complete the cable solution.

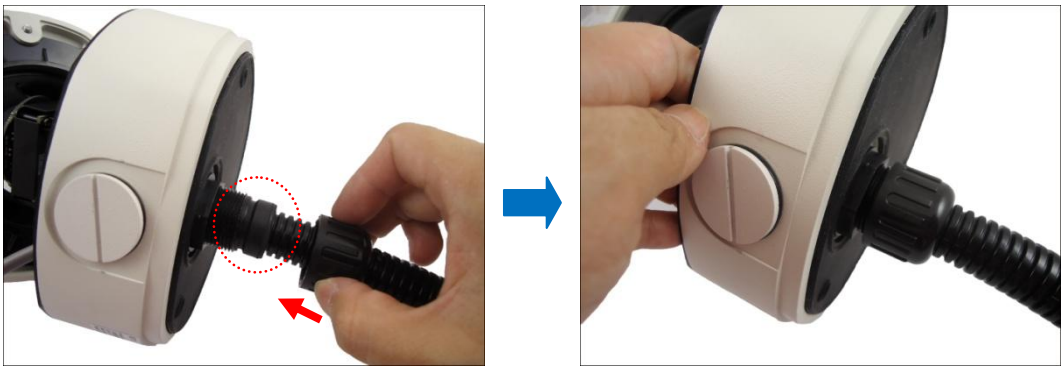

Step 4: Install the Camera to the Surface

1. If necessary, insert a micro SHDC card into the card slot of the camera.
2. Align the camera screw holes and the conduit hole (if necessary) to the holes on the surface and attach the three (3) supplied screws to secure the camera.

Step 5: Connect the Cable

1. ***If the cable will be routed along the surface***, pull the network cable through the side conduit hole and attach the clamping nut to the conduit gland body. ***If the cable passes through the surface***, skip to step 2.

2. Connect the network cable to the Ethernet port of the camera.

3. Connect the other end of the network cable to a Power-over-Ethernet (PoE) switch or injector. Then, connect the PoE switch or injector to a network or PC and a power source. See example connection diagram below.

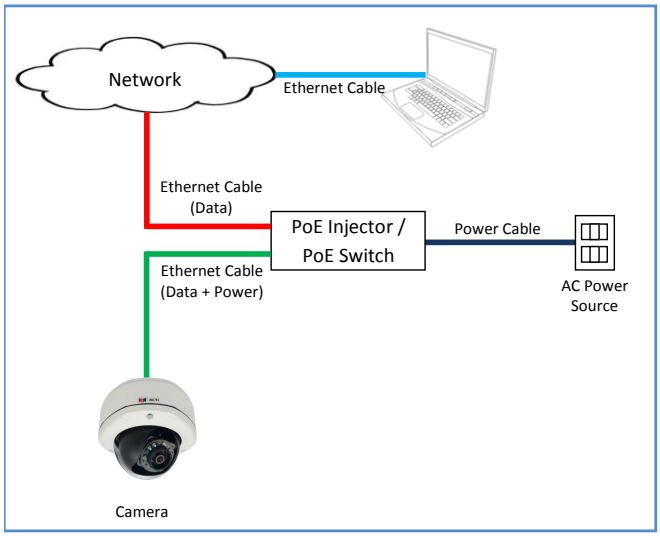

Step 6: Access the Camera Live View

See ***Mounting the Camera*** Using Flush Mount

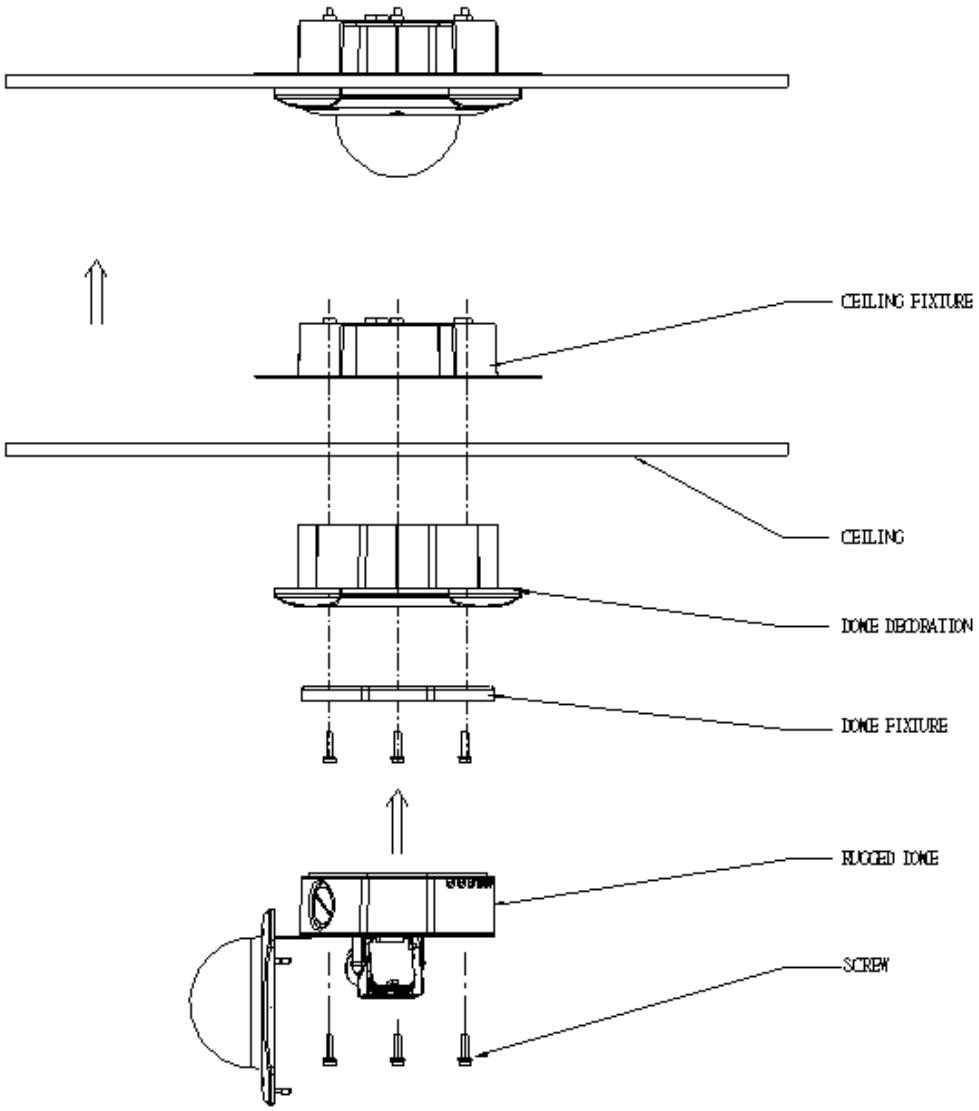

Mounting the Camera Using the L-Type Wall Mount

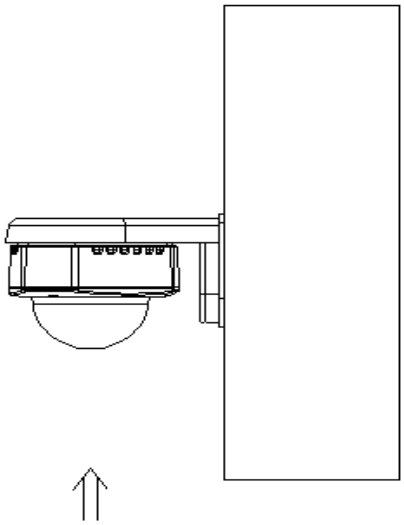

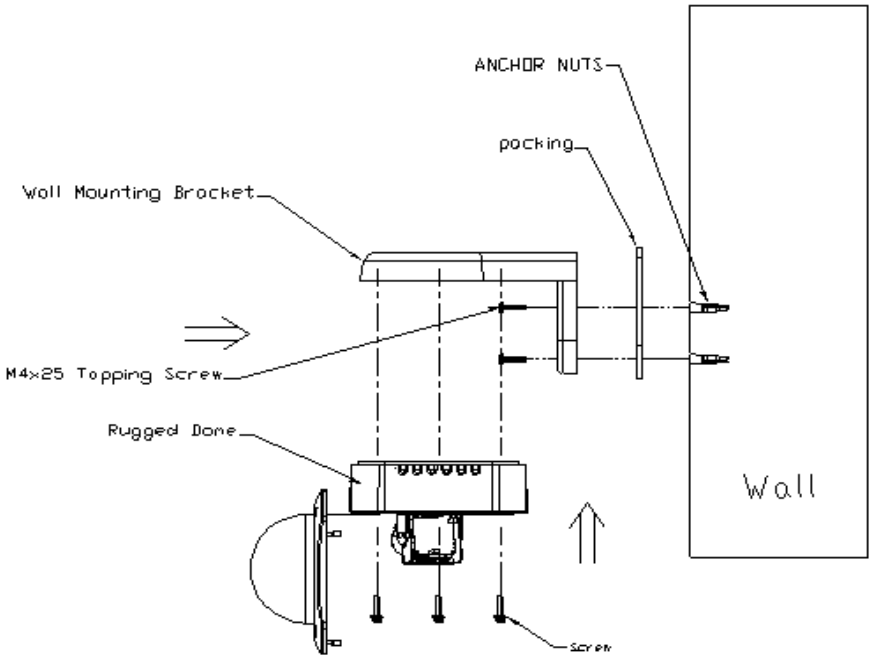

Accessing the Camera on page 20 for more information on how to access the Live View of the camera.

Step 7: Adjust the Viewing Angle and Focus

Based on the live view, adjust the viewing angle and orientation of the camera. Adjustments vary per model, for detailed information, please refer to ***Focus and Viewing Angle Adjustments*** on page 28.

Step 8: Close the Dome Cover

1. Align the position of the dome cover shroud to the direction of the lens.

2. Tighten the three (3) screws to attach the dome cover to the camera body.

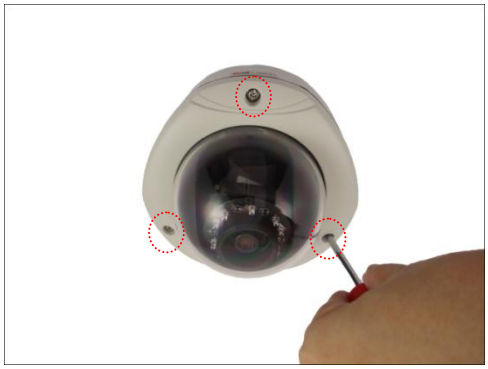

Mounting the Camera Using Flush Mount

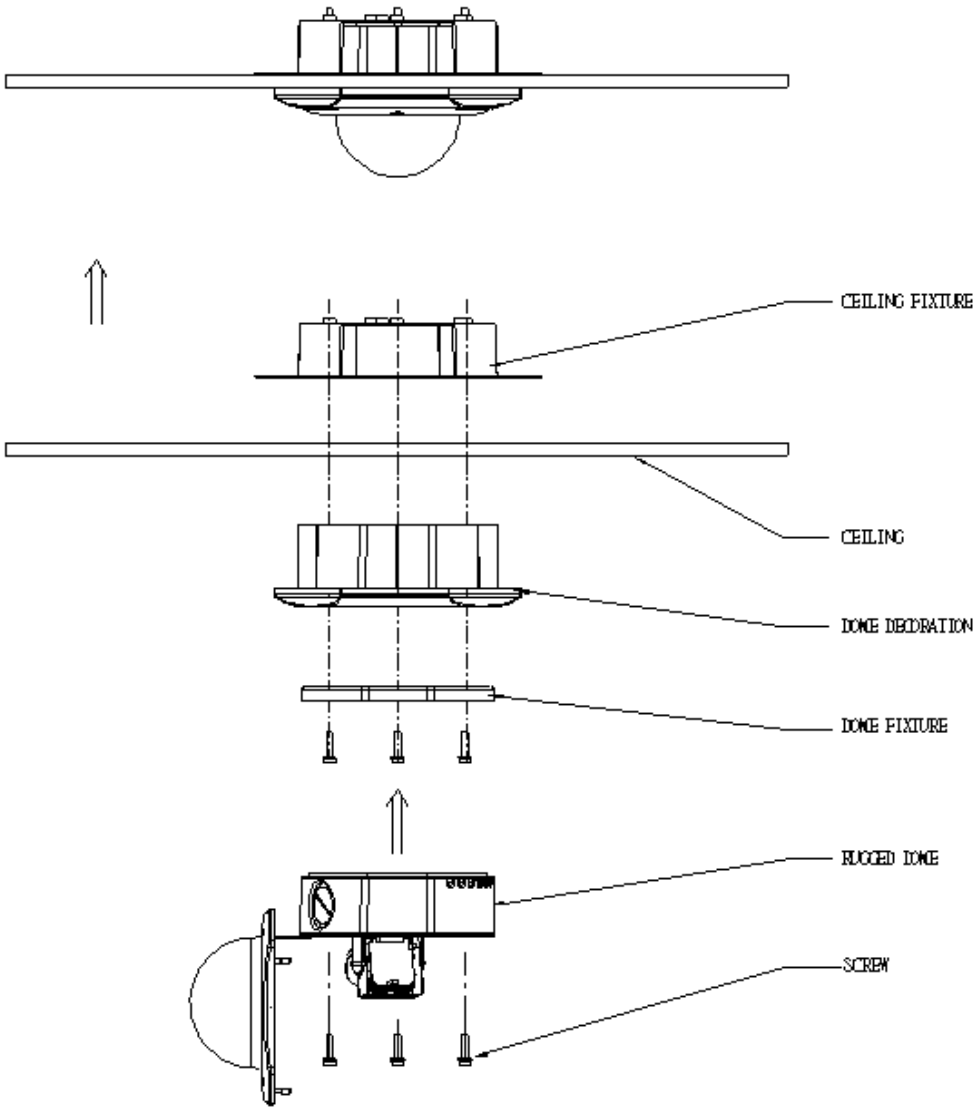

Mounting the Camera Using the L-Type Wall Mount

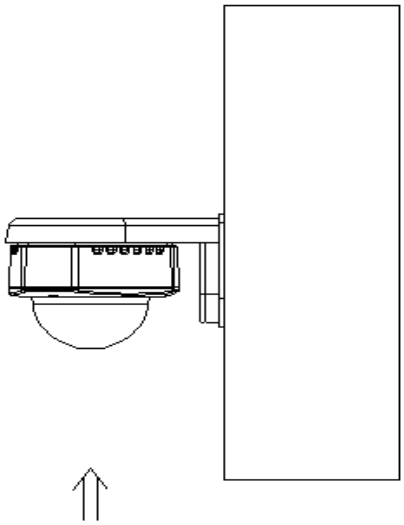

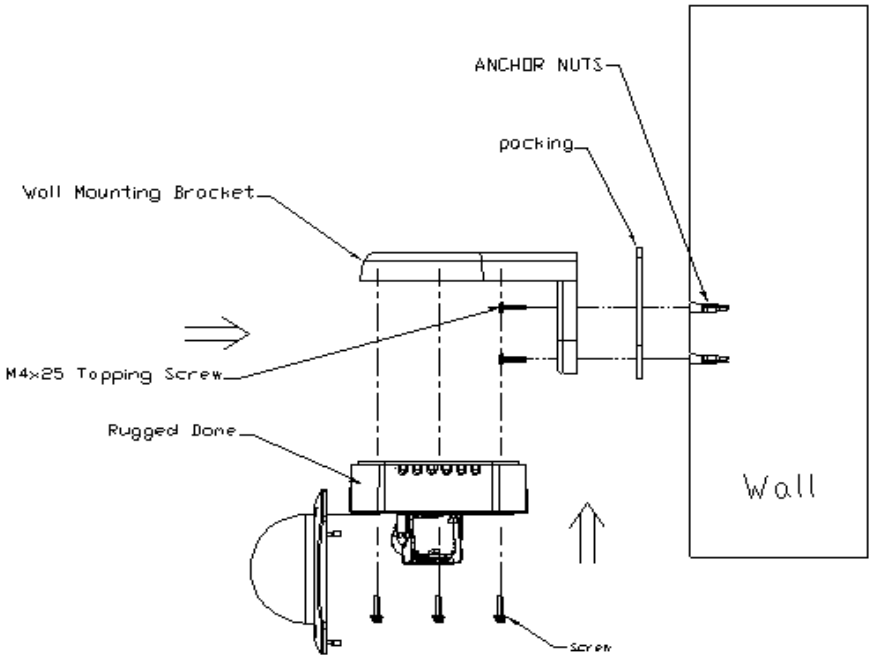

Accessing the Camera

Configure the IP Addresses

In order to be able to communicate with the camera from your PC, both the camera and the PC have to be within the same network segment. In most cases, it means that they both should have very similar IP addresses, where only the last number of the IP address is different from each other. There are 2 different approaches to IP Address management in Local Area Networks – by DHCP Server or Manually.

Using DHCP server to assign IP addresses:

If you have connected the computer and the camera into the network that has a DHCP server running, then you do not need to configure the IP addresses at all – both the camera and the PC would request a unique IP address from DHCP server automatically. In such case, the camera will immediately be ready for the access from the PC. The user, however, might not know the IP address of the camera yet. It is necessary to know the IP address of the camera in other to be able to access it by using a Web browser.

The quickest way to discover the cameras in the network is to use the simplest network search, built in the Windows system – just by pressing the “Network” icon, all the cameras of the local area network will be discovered by Windows thanks to the UPnP function support of our cameras.

In the example below, we successfully found the camera model that had just connected to the network.

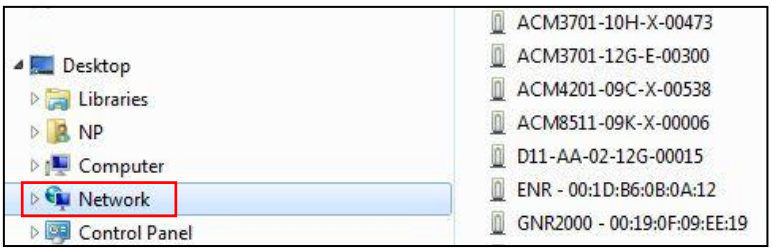

With the left mouse click on the camera model name it is possible to automatically launch the default browser of the PC with the IP address of the target camera filled in the address bar of the browser already.

If you work with our cameras regularly, then **there is even a better way to discover the cameras in the network** – by using **IP Utility**. The IP Utility is a light software tool that can not only discover the cameras, but also list lots of valuable information, such as IP and MAC addresses, serial numbers, firmware versions, etc, and allows quick configuration of multiple devices at the same time.

The IP Utility can be downloaded for free from **http://www.acti.com/IP_Utility**

With just one click, you can launch the IP Utility and there will be an instant report as follows:

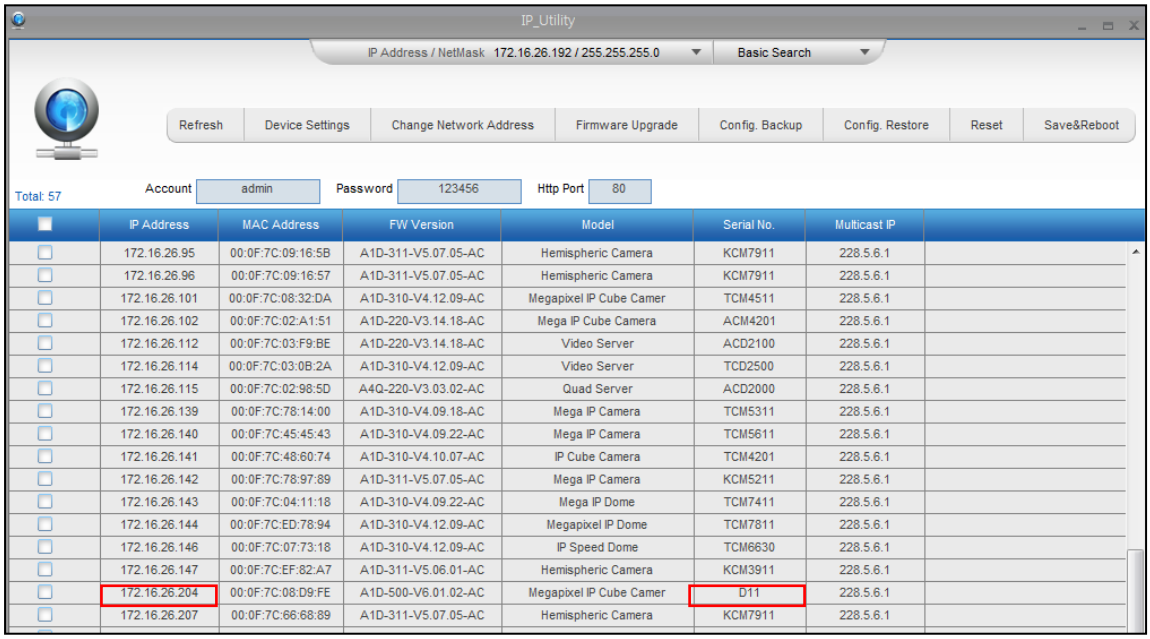

IP Address	MAC Address	FW Version	Model	Serial No.	Multicast IP
172.16.26.95	00:0F:7C:09:16:5B	A1D-311-V5.07.05-AC	Hemispheric Camera	KCM7911	228.5.6.1
172.16.26.96	00:0F:7C:09:16:57	A1D-311-V5.07.05-AC	Hemispheric Camera	KCM7911	228.5.6.1
172.16.26.101	00:0F:7C:08:32:DA	A1D-310-V4.12.09-AC	Megapixel IP Cube Camer	TCM4511	228.5.6.1
172.16.26.102	00:0F:7C:02:A1:51	A1D-220-V3.14.18-AC	Mega IP Cube Camera	ACM4201	228.5.6.1
172.16.26.112	00:0F:7C:03:F9:BE	A1D-220-V3.14.18-AC	Video Server	ACD2100	228.5.6.1
172.16.26.114	00:0F:7C:03:0B:2A	A1D-310-V4.12.09-AC	Video Server	TCD2500	228.5.6.1
172.16.26.115	00:0F:7C:02:98:5D	A4Q-220-V3.03.02-AC	Quad Server	ACD2000	228.5.6.1
172.16.26.139	00:0F:7C:78:14:00	A1D-310-V4.09.18-AC	Mega IP Camera	TCM5311	228.5.6.1
172.16.26.140	00:0F:7C:45:45:43	A1D-310-V4.09.22-AC	Mega IP Camera	TCM5611	228.5.6.1
172.16.26.141	00:0F:7C:48:60:74	A1D-310-V4.10.07-AC	IP Cube Camera	TCM4201	228.5.6.1
172.16.26.142	00:0F:7C:78:97:89	A1D-311-V5.07.05-AC	Mega IP Camera	KCM5211	228.5.6.1
172.16.26.143	00:0F:7C:04:11:18	A1D-310-V4.09.22-AC	Mega IP Dome	TCM7411	228.5.6.1
172.16.26.144	00:0F:7C:ED:78:94	A1D-310-V4.12.09-AC	Megapixel IP Dome	TCM7811	228.5.6.1
172.16.26.146	00:0F:7C:07:73:18	A1D-310-V4.12.09-AC	IP Speed Dome	TCM6630	228.5.6.1
172.16.26.147	00:0F:7C:EF:82:A7	A1D-311-V5.06.01-AC	Hemispheric Camera	KCM3911	228.5.6.1
172.16.26.204	00:0F:7C:08:D9:FE	A1D-500-V6.01.02-AC	Megapixel IP Cube Camer	D11	228.5.6.1
172.16.26.207	00:0F:7C:66:68:89	A1D-311-V5.07.05-AC	Hemispheric Camera	KCM7911	228.5.6.1

You can quickly notice the camera model in the list. Click on the IP address to automatically launch the default browser of the PC with the IP address of the target camera filled in the address bar of the browser already.

Use the default IP address of a camera:

If there is no DHCP server in the given network, the user may have to assign the IP addresses to both PC and camera manually to make sure they are in the same network segment.

When the camera is plugged into network and it does not detect any DHCP services, it will automatically assign itself a default IP:

192.168.0.100

Whereas the default port number would be **80**. In order to access that camera, the IP address of the PC has to be configured to match the network segment of the camera.

Manually adjust the IP address of the PC:

In the following example, based on Windows 7, we will configure the IP address to **192.168.0.99** and set Subnet Mask to **255.255.255.0** by using the steps below:

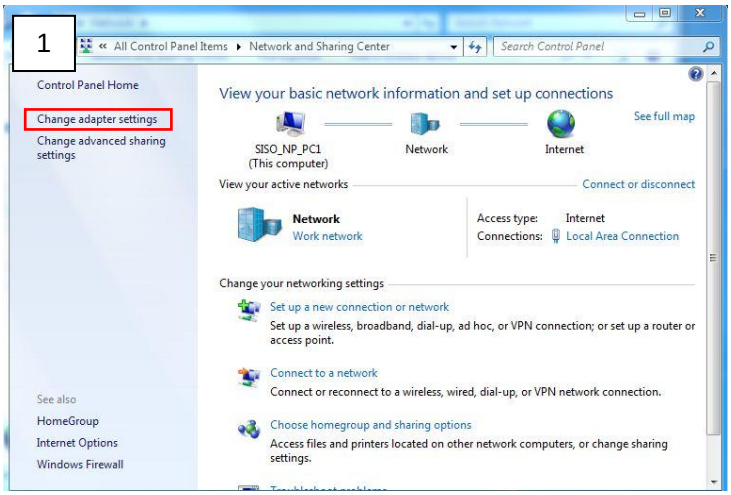

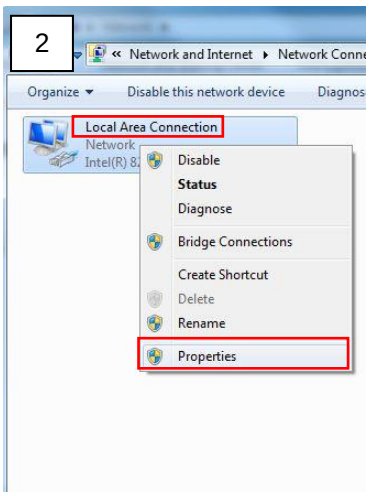

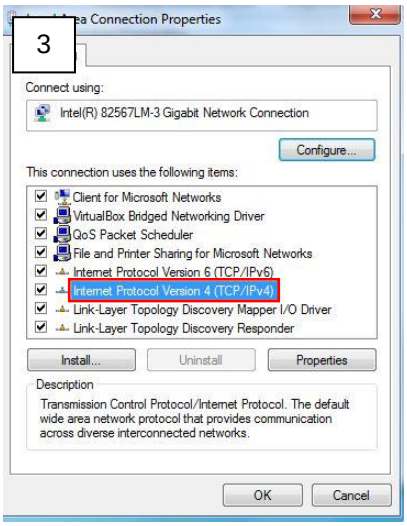

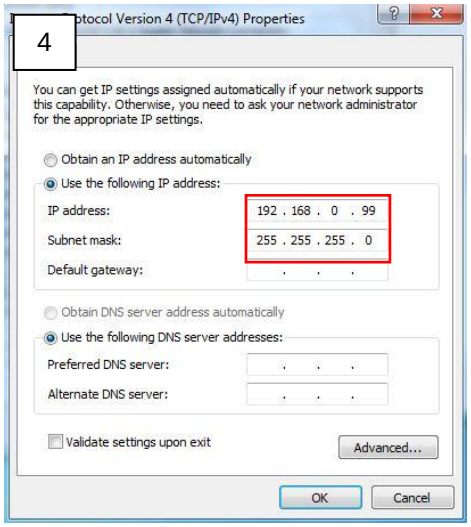

Manually adjust the IP addresses of multiple cameras:

If there are more than 1 camera to be used in the same local area network and there is no DHCP server to assign unique IP addresses to each of them, all of the cameras would then have the initial IP address of **192.168.0.100**, which is not a proper situation for network devices – all the IP addresses have to be different from each other. The easiest way to assign cameras the IP addresses is by using **IP Utility**:

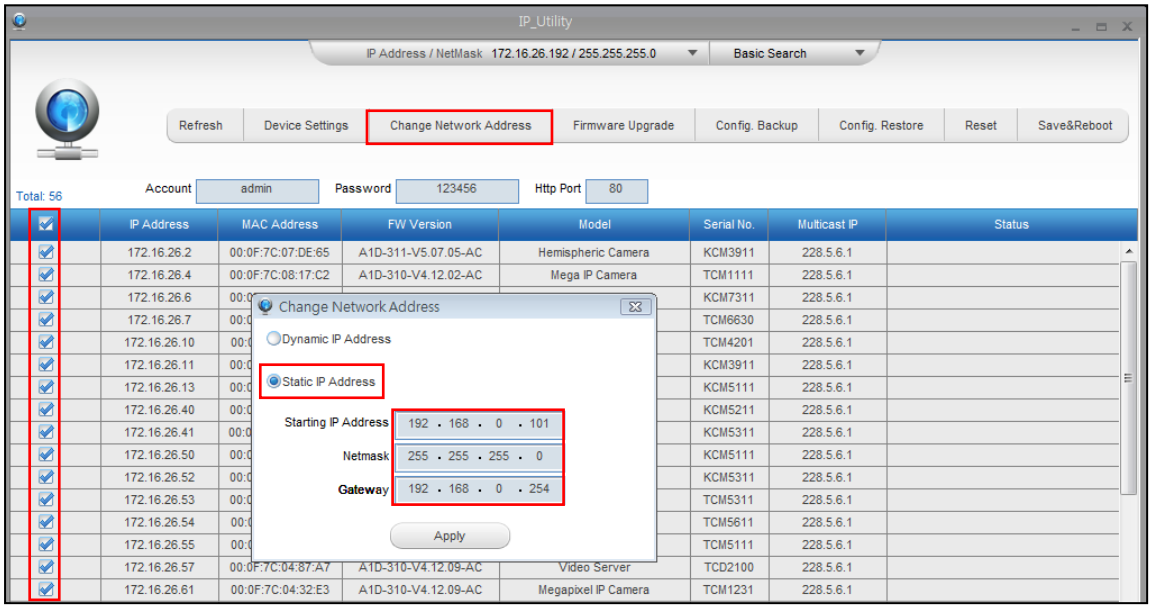

With the procedure shown above, all the cameras will have unique IP addresses, starting from 192.168.0.101. In case there are 20 cameras selected, the last one of the cameras would have the IP 192.168.0.120.

Later, by pressing the “Refresh” button of the IP Utility, you will be able to see the list of cameras with their new IP addresses.

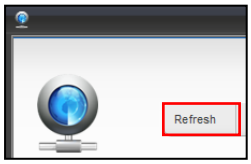

Please note that it is also possible to change the IP addresses manually by using the Web browser. In such case, please plug in only one camera at a time, and change its IP address by using the Web browser before plugging in the next one. This way, the Web browser will not be confused about two devices having the same IP address at the same time.

Access the Camera

Now that the camera and the PC are both having their unique IP addresses and are under the same network segment, it is possible to use the Web browser of the PC to access the camera.

You can use **any of the browsers** to access the camera, however, the full functionality is provided only for **Microsoft Internet Explorer**.

The browser functionality comparison:

Functionality	Internet Explorer	Other browsers
Live Video	Yes	Yes*
Live Video Area Resizable	Yes	No
PTZ Control	Yes	Yes
Capture the snapshot	Yes	Yes
Video overlay based configuration (Motion Detection regions, Privacy Mask regions)	Yes	No
All the other configurations	Yes	Yes

* The basic **VLC media player** (http://www.videolan.org) has to be installed in PC first before using any non-Internet Explorer browsers to be able to get live video feed from the camera with those browsers. It is a free and open source cross-platform multimedia player.

Disclaimer Notice: The camera manufacturer does not guarantee the compatibility of its cameras with VLC player – since it is a third party software, the third party has the right to modify their utility any time which might affect the compatibility. In such cases, please use Internet Explorer browser instead.

When using Internet Explorer browser, the ActiveX control for video stream management will be downloaded from the camera directly – the user just has to accept the use of such control when prompted so. No other third party utilities are required to be installed in such case.

The following examples in this manual are based on Internet Explorer browser in order to cover all functions of the camera.

Assuming that the camera's IP address is **192.168.0.100**, you can access it by opening the Web browser and typing the following address into Web browser's address bar:

http://192.168.0.100

Upon successful connection to the camera, the user interface called **Web Configurator** would appear together with the login page. The HTTP port number was not added behind the IP address since the default HTTP port of the camera is 80, which can be omitted from the address for convenience.

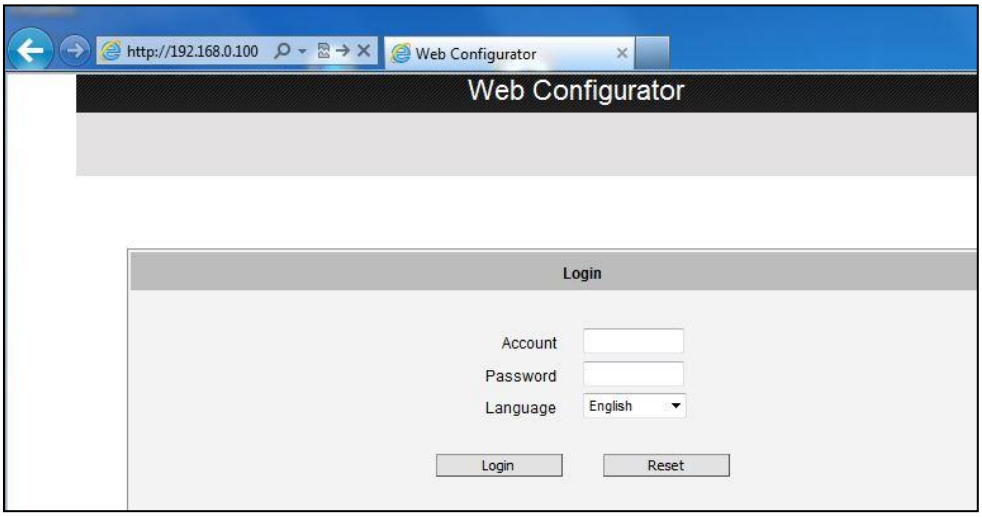

Before logging in, you need to know the factory default Account and Password of the camera.

Account: **Admin**

Password: **123456**

For further operations, please refer to the **Firmware User Manual**.

Other Adjustments and Accessories

Focus and Viewing Angle Adjustments

This section describes the procedures in adjusting the viewing angle, focus, and pan direction of the camera.

D7x / E7x Series

Camera Parts Overview

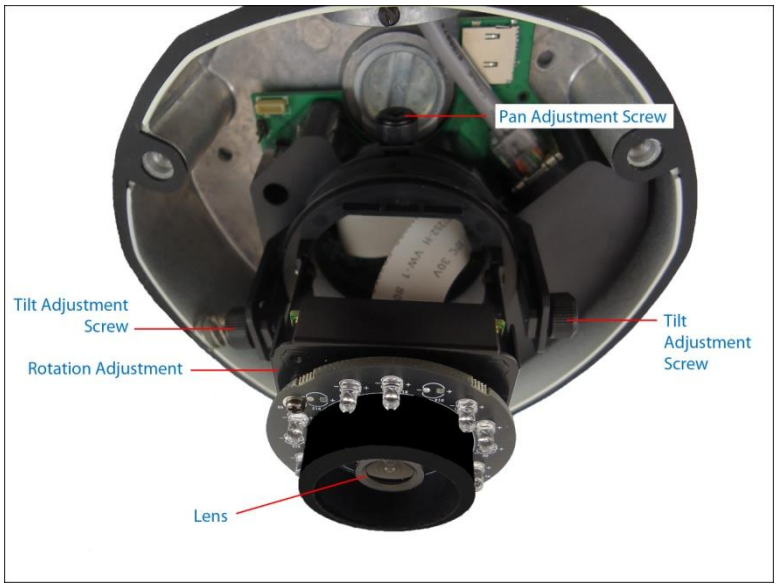

Adjustment Procedures

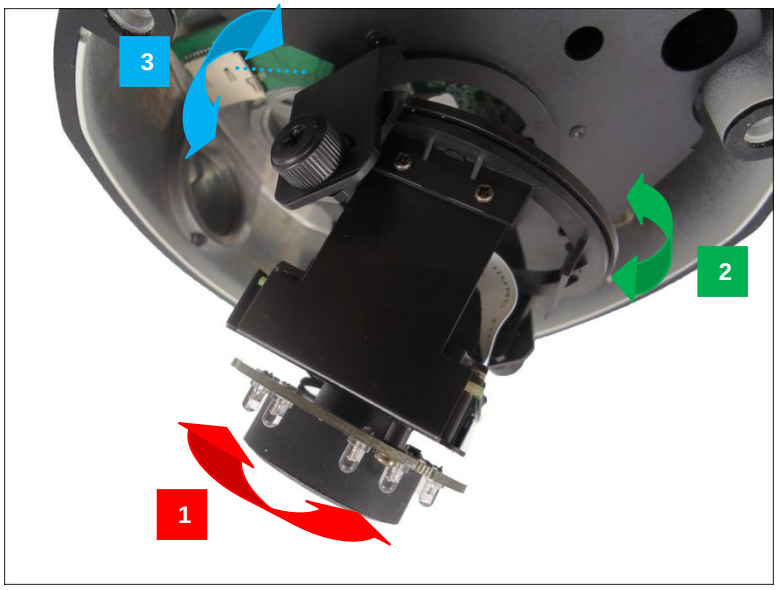

1. Loosen the tilt adjustment screws, adjust the tilt, and then tighten back the screws to fix the tilt position.
2. Move the rotation adjustment to rotate the viewing orientation.
3. Loosen the pan adjustment screw, move the pan direction, and then tighten back the screw to fix the pan position.
4. Attach the bundled lens focus tuner unto the lens and turn left or right to adjust the focus.

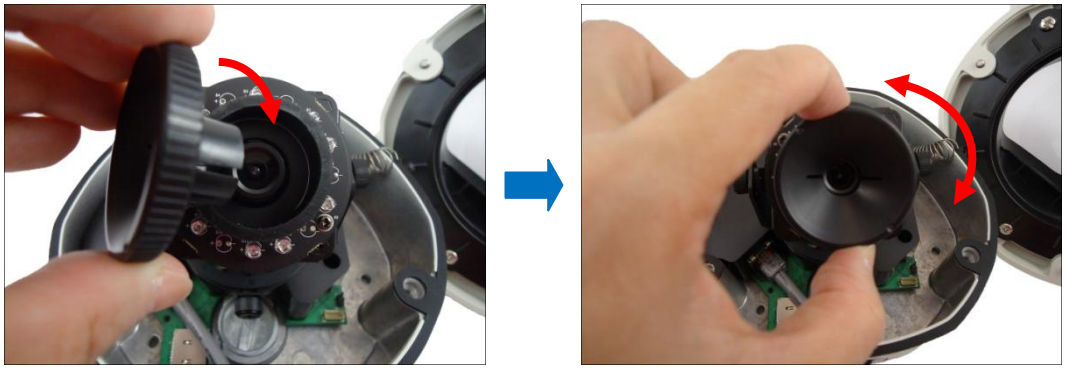

D8x / E8x Series

Camera Parts Overview

Adjustment Procedures

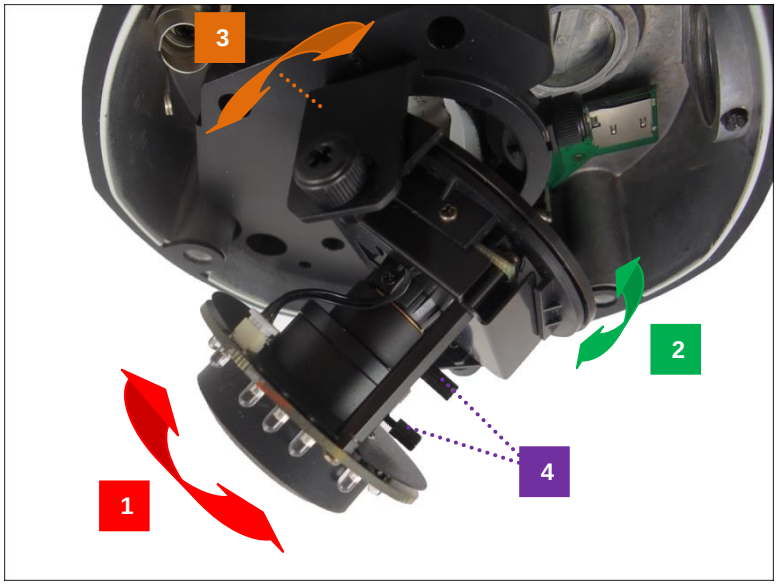

1. Loosen the tilt adjustment screws, adjust the tilt, and then tighten back the screws to fix the tilt position.
2. Move the rotation adjustment to rotate the viewing orientation.
3. Loosen the pan adjustment screw, move the pan direction, and then tighten back the screw to fix the pan position.
4. Move the zoom and focus levers left or right to adjust the focus and the viewing angle.