USER MANUAL

AXIS P1354–E Network Camera

use-IP
www.use-ip.co.uk
01304 827609

About this document

This manual is intended for administrators and users of the AXIS P1354–E Network Camera, and is applicable to firmware 5.40 and later. It includes instructions for using and managing the product on your network. Previous experience of networking will be of use when using this product. Some knowledge of UNIX or Linux-based systems may also be beneficial, for developing shell scripts and applications. Later version of this document will be posted to the Axis website, as required. See also the product's online help, available via the web-based interface.

Liability

Every care has been taken in the preparation of this document. Please inform your local Axis office of any inaccuracies or omissions. Axis Communications AB cannot be held responsible for any technical or typographical errors and reserves the right to make changes to the product and manuals without prior notice. Axis Communications AB makes no warranty of any kind with regard to the material contained within this document, including, but not limited to, the implied warranties of merchantability and fitness for a particular purpose. Axis Communications AB shall not be liable nor responsible for incidental or consequential damages in connection with the furnishing, performance or use of this material. This product is only to be used for its intended purpose.

Intellectual Property Rights

Axis AB has intellectual property rights relating to technology embodied in the product described in this document. In particular, and without limitation, these intellectual property rights may include one or more of the patents listed at *http://www.axis.com/patent.htm* and one or more additional patents or pending patent applications in the US and other countries.

This product contains licensed third-party software. See the menu item "About" in the product's user interface for more information.

This product contains source code copyright Apple Computer, Inc., under the terms of Apple Public Source License 2.0 (see *http://www.opensource.apple.com/apsl*). The source code is available from *http://developer.apple.com/darwin/projects/bonjour/*

Equipment Modifications

This equipment must be installed and used in strict accordance with the instructions given in the user documentation. This equipment contains no user-serviceable components. Unauthorized equipment changes or modifications will invalidate all applicable regulatory certifications and approvals.

Trademark Acknowledgments

Apple, Boa, Apache, Bonjour, Ethernet, Internet Explorer, Linux, Microsoft, Mozilla, Real, SMPTE, QuickTime, UNIX, Windows, Windows Vista and WWW are registered trademarks of the respective holders. Java and all Java-based trademarks and logos are trademarks or registered trademarks of Oracle and/or its affiliates. UPnP™ is a certification mark of the UPnP™ Implementers Corporation.

Regulatory Information

Europe

CE This product complies with the applicable CE marking directives and harmonized standards:

- Electromagnetic Compatibility (EMC) Directive 2004/108/EC. See *Electromagnetic Compatibility (EMC), on page 2*.
- Low Voltage (LVD) Directive 2006/95/EC. See *Safety, on page 2*.
- Restrictions of Hazardous Substances (RoHS) Directive 2011/65/EU. See *Disposal and Recycling, on page 2*.

A copy of the original declaration of conformity may be obtained from Axis Communications AB, Emdalavägen 14, SE-223 69 Lund.

Electromagnetic Compatibility (EMC)

This equipment has been designed and tested to fulfill applicable standards for:

- Radio frequency emission when installed according to the instructions and used in its intended environment.
- Immunity to electrical and electromagnetic phenomena when installed according to the instructions and used in its intended environment.

USA

This equipment has been tested using a shielded network cable (STP) and found to comply with the limits for a Class B digital device, pursuant to part 15 of the FCC Rules. These limits are designed to provide reasonable protection against harmful interference in a residential installation. This equipment generates, uses and can radiate radio frequency energy and, if not installed and used in accordance with the instructions, may cause harmful interference to radio communications. However, there is no guarantee that interference will not occur in a particular installation. If this equipment does cause harmful interference to radio or television reception, which can be determined by turning the equipment off and on, the user is encouraged to try to correct the interference by one or more of the following measures:

- Reorient or relocate the receiving antenna.
- Increase the separation between the equipment and receiver.
- Connect the equipment into an outlet on a circuit different from that to which the receiver is connected.
- Consult the dealer or an experienced radio/TV technician for help.

Canada

This Class B digital apparatus complies with Canadian ICES-003.

Europe

This digital equipment fulfills the requirements for RF emission according to the Class B limit of EN 55022.

This product fulfills the requirements for immunity according to EN 61000-6-1 residential, commercial and light-industrial environments.

This product fulfills the requirements for immunity according to EN 61000-6-2 industrial environments.

This product fulfills the requirements for immunity according to EN 55024 office and commercial environments

Australia/New Zealand

This digital equipment fulfills the requirements for RF emission according to the Class B limit of AS/NZS CISPR 22.

Japan

この装置は、クラスB 情報技術装置です。この装置は、家庭環境で使用することを目 的としていますが、この装置がラジオやテレビジョン受信機に近接して使用されると、 受信障害を引き起こすことがあります。 取扱説明書に従って正しい取り扱いをして下さい。

Korea

이 기기는 가정용(B급) 전자파적합기기로서 주로 가정에서 사용하는 것을 목적으로 하며, 모든 지역에서 사용할 수 있습니다.

Safety

This product complies with IEC/EN/UL 60950-1 and IEC/EN/UL 60950-22, Safety of Information Technology Equipment.

Disposal and Recycling

When this product has reached the end of its useful life, dispose of it according to local raws and regulations. For information about your nearest designated collection point, contact your local authority responsible for waste disposal. In accordance with local legislation, penalties may be applicable for incorrect disposal of this waste.

Europe

This symbol means that the product shall not be disposed of together with household or commercial waste. Directive 2012/19/EU on waste electrical and electronic equipment (WEEE) is applicable in the European Union member states. To prevent potential harm to human health and the environment, the product must be disposed of in an approved and environmentally safe recycling process. For information about your nearest designated collection point, contact your local authority responsible for waste disposal. Businesses should contact the product supplier for information about how to dispose of this product correctly.

This product complies with the requirements of Directive 2011/65/EU on the restriction of the use of certain hazardous substances in electrical and electronic equipment (RoHS).

China

This product complies with the requirements of the legislative act Administration on the Control of Pollution Caused by Electronic Information Products (ACPEIP).

Support

Should you require any technical assistance, please contact your Axis reseller. If your questions cannot be answered immediately, your reseller will forward your queries through the appropriate channels to ensure a rapid response. If you are connected to the Internet, you can:

- download user documentation and software updates
- find answers to resolved problems in the FAQ database. Search by product, category, or phrase
- report problems to Axis support staff by logging in to your private support area
- chat with Axis support staff (selected countries only)
- visit Axis Support at *www.axis.com/techsup/*

Learn More!

Visit Axis learning center *www.axis.com/academy/* for useful trainings, webinars, tutorials and guides.

Table of Contents

Hardware Overview 6
- Connectors 7
- LED Indicators 8
- Status LED when using Focus Assistant 9
- Midspan LED Indicators 9
- Replacing the lens 9

Accessing the Product 11
- Access from a Browser 11
- Access from the Internet 12
- Set the Root Password 12
- Set Power Line Frequency 13
- PTZ mode 13
- The Live View Page 13

Media Streams 17
- How to Stream H.264 17
- MJPEG 17
- AXIS Media Control (AMC) 17
- Alternative Methods of Accessing the Video Stream 18
- Accessing Audio Streams 19

Setting Up the Product 20
- Basic Setup 20
- Focus 20

Video and Audio 21
- Video Stream 21
- Stream Profiles 23
- Camera Settings 23
- View Area 25
- Overlay 25
- Privacy Mask 26
- Audio Settings 26
- Audio Clips 28

Live View Config 29

PTZ (Pan Tilt Zoom) 32
- Preset Positions 32
- Installing a PTZ driver 32
- Guard Tour 33
- Advanced 33

Detectors 35
- Camera Tampering 35
- Motion Detection 35
- Audio Detection 37

Applications 38

Events 39
- Setting Up an Action Rule 40
- Recipients 41
- Schedules 41
- Recurrences 41

Recordings 43
- Recording List 43
- Continuous Recording 43

System Options 44
- Security 44
- Date & Time 47
- Network 47
- Storage 52
- Ports & Devices 53
- Maintenance 54
- Support 54
- Advanced 55
- Reset to Factory Default Settings 56

Troubleshooting 57

Table of Contents

Checking the Firmware 57
Upgrading the Firmware 57
Emergency Recovery Procedure 57
Symptoms, Possible Causes and Remedial Actions 58
Technical Specifications 61
Connectors 64
Performance Considerations 65

Hardware Overview

Hardware Overview

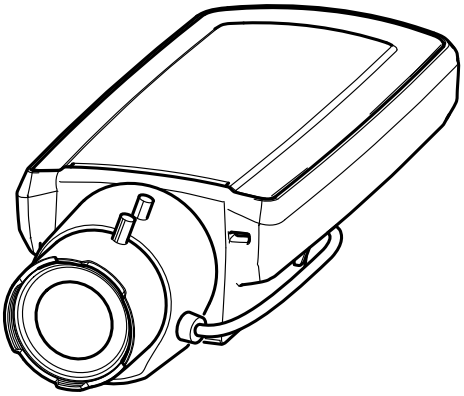

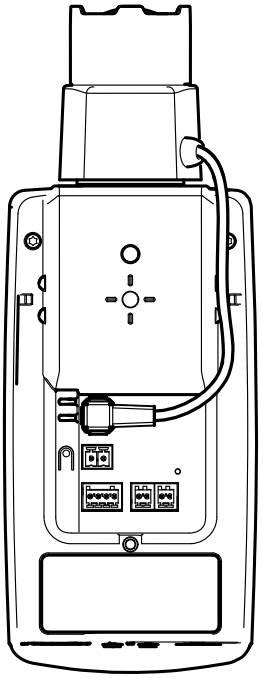

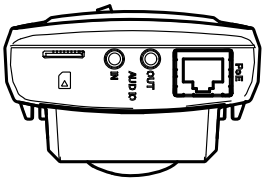

Hardware Overview

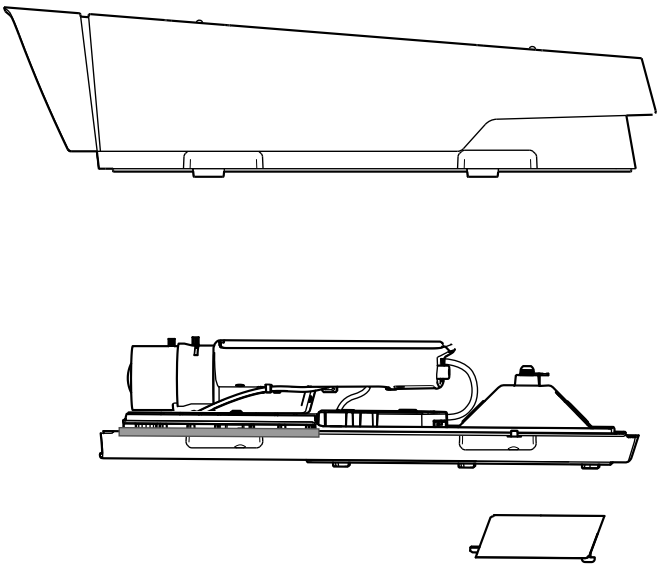

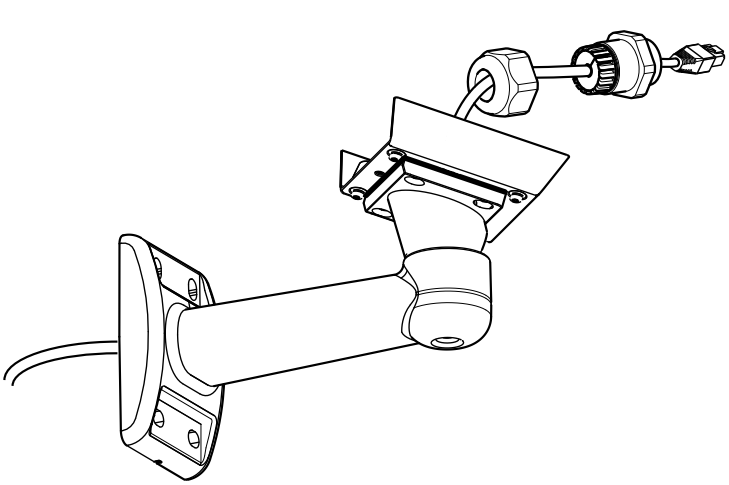

Connectors

For technical specifications, see *page 61*.

Network connector – RJ45 Ethernet connector. Supports Power over Ethernet (PoE).

Hardware Overview

NOTICE

The product shall be connected using a shielded network cable (STP). All cables connecting the product to the network switch shall be shielded (STP) and intended for their specific use. Make sure that the network switch is properly grounded. For information about regulatory requirements, see *Regulatory Information, on page 2*.

Audio in (pink) – 3.5 mm input for a mono microphone, or a line-in mono signal (left channel is used from a stereo signal).

Audio out (green) – 3.5 mm output for audio (line level) that can be connected to a public address (PA) system or an active speaker with a built-in amplifier. A stereo connector must be used for audio out.

SD card slot – A standard or high-capacity microSD card (not included) can be used for local recording with removable storage.

NOTICE

To prevent corruption of recordings, the SD card should be unmounted before removal. To unmount, go to **Setup > System Options > Storage > SD Card** and click **Unmount**.

Control button – The control button is used for:

- Enabling the Focus Assistant. Press and very quickly release the Control button.
- Resetting the product to factory default settings. See *page 56*.
- Connecting to an AXIS Video Hosting System service. See *page 48*. To connect, press and hold the button for about 1 second until the Status LED flashes green.
- Connecting to AXIS Internet Dynamic DNS Service. See *page 49*. To connect, press and hold the button for about 3 seconds.

Power connector – 2-pin terminal block for power input. Use a limited power source (LPS) with either a rated output power limited to £100 W or a rated output current limited to £5 A.

I/O terminal connector – Use in applications for e.g. motion detection, event triggering, time lapse recording and alarm notifications. In addition to an auxiliary power and a GND pin, the I/O terminal connector provides the interface to:

- **Digital output** – For connecting external devices such as relays and LEDs. Connected devices can be activated by the VAPIX® Application Programming Interface, output buttons on the Live View page or by an Action Rule. The output will show as active (shown under **System Options > Ports & Devices**) if the alarm device is activated.
- **Digital input** – An alarm input for connecting devices that can toggle between an open and closed circuit, for example: PIRs, door/window contacts, glass break detectors, etc. When a signal is received the state changes and the input becomes active (shown under **System Options > Ports & Devices**).

Note

The I/O connector is connected to the housing (fan/heater) on delivery, and will trigger an input port event to indicate a fan or heater error when activated. See *Events, on page 39* for information about events.

RS-485/RS-422 connector – Two 2-pin terminal blocks for RS-485/RS-422 serial interface used to control auxiliary equipment, e.g. PTZ devices.

LED Indicators

LED	Color	Indication
Network	Green	Steady for connection to a 100 MBit/s network. Flashes for network activity.
	Amber	Steady for connection to a 10 MBit/s network. Flashes for network activity.
	Unlit	No network connection.

Hardware Overview

Status	Green	Steady green for normal operation.
	Amber	Steady during startup and when restoring settings.
	Red	Slow flash for failed upgrade.
Power	Green	Normal operation.
	Amber	Flashes green/amber during firmware upgrade.

LED	Color	Indication
Housing (fan and heater)	Green	Normal operation.
	Flashing green	Single flash: Heater error Double flash: Fan error Triple flash: General error Alarm events will be triggered through the camera's input port. Contact your Axis reseller for information about spare parts and troubleshooting.

Note

- The Status LED can be configured to be unlit during normal operation. To configure, go to **Setup > System Options > Ports & Devices > LED**. See the online help for more information.
- The Status LED can be configured to flash while an event is active.
- The Status LED can be configured to flash for identifying the unit. Go to **Setup > System Options > Maintenance** .

Status LED when using Focus Assistant

Status	Color	Indication
	Green	Focus Assistant is enabled The lens is optimally adjusted
	Amber	The camera has been moved, or an object has been inserted in front of the lens. Exit and restart the Focus Assistant. The lens is less optimally adjusted
	Red	The camera has been moved, or an object has been inserted in front of the lens. Exit and restart the Focus Assistant. The lens is poorly adjusted

Midspan LED Indicators

LED	Color	Indication
Port	Unlit	No camera connected.
	Green	Steady when camera connected, normal operation.
	Green, flashing	Slow flash when overcurrent or short circuit condition on the port.
	Green, flashing	Fast flash when input voltage is out of range or other internal error.
AC	Green	Steady when AC power input connected.

Replacing the lens

It is possible to use optional lenses for the Axis product.

To replace the lens:

Hardware Overview

1. Disconnect the iris cable.
2. Unscrew the standard lens.
3. Attach and screw on the new lens.

Accessing the Product

Accessing the Product

To install the Axis product, refer to the Installation Guide supplied with the product.

The product can be used with most operating systems and browsers. The recommended browsers are Internet Explorer with Windows, Safari with Macintosh and Firefox with other operating systems. See *Technical Specifications, on page 61*. To view streaming video in Internet Explorer, allow installation of AXIS Media Control (AMC) when prompted.

Note

- QuickTime™ is also supported for viewing H.264 streams and for audio.
- If your computer restricts the use of additional software components, the product can be configured to use a Java applet for viewing Motion JPEG.

Access from a Browser

1. Start a browser (Internet Explorer, Firefox, Safari).
2. Enter the IP address or host name of the Axis product in the browser's Location/Address field. To access the product from a Macintosh computer (Mac OS X), click on the Bonjour tab and select the product from the drop-down list.

   If you do not know the IP address, use AXIS IP Utility to locate the product on the network. For information about how to discover and assign an IP address, see the Installation and Management Software CD or the document *Assign an IP Address and Access the Video Stream* on Axis Support web at www.axis.com/techsup
3. Enter your user name and password. If this is the first time the product is accessed, the root password must first be configured. For instructions, see *Set the Root Password, on page 12*.
4. The product's Live View page appears in your browser.

Note

The controls and layout of the Live View page may have been customized to meet specific installation requirements and user preferences. Consequently, some of the examples and functions featured here may differ from those displayed in your own Live View page.

Accessing the Product

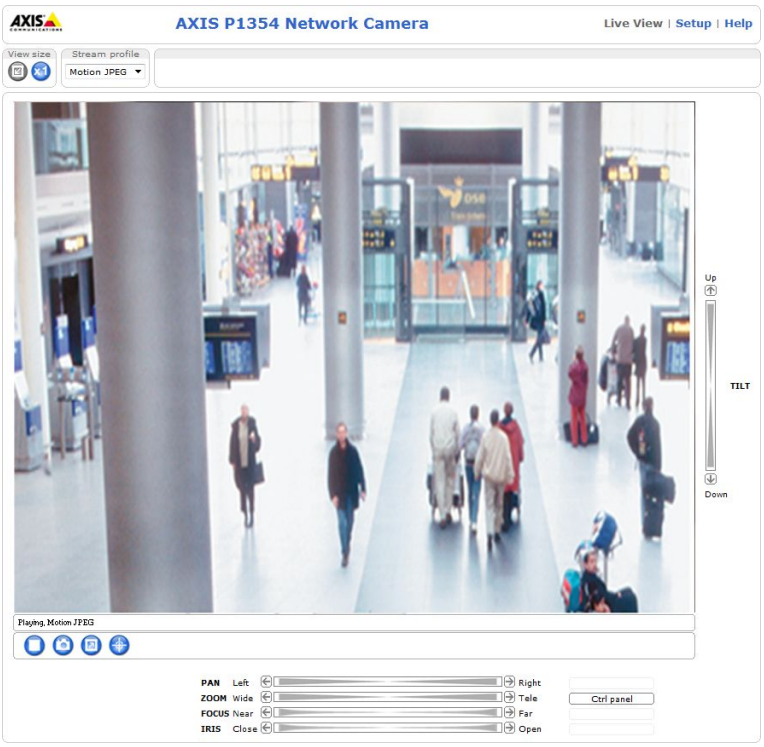

Access from the Internet

Once connected, the Axis product is accessible on your local network (LAN). To access the product from the Internet you must configure your network router to allow incoming data traffic to the product. To do this, enable the NAT-traversal feature, which will attempt to automatically configure the router to allow access to the product. This is enabled from **Setup > System Options > Network > TCP/IP Advanced.**

For more information, please see *NAT traversal (port mapping) for IPv4, on page 50*. See also AXIS Internet Dynamic DNS Service at www.axiscam.net For Technical notes on this and other topics, visit the Axis Support web at www.axis.com/techsup

Set the Root Password

To gain access to the Axis product, you must set the password for the default administrator user **root**. This is done in the **Configure Root Password** dialog, which appears when the product is accessed for the first time.

To prevent network eavesdropping, the root password can be set via an encrypted HTTPS connection, which requires an HTTPS certificate. HTTPS (Hypertext Transfer Protocol over SSL) is a protocol used to encrypt traffic between web browsers and servers. The HTTPS certificate ensures encrypted exchange of information. See *HTTPS, on page 50*.

The default administrator user name **root** is permanent and cannot be deleted. If the password for root is lost, the product must be reset to the factory default settings. See *Reset to Factory Default Settings, on page 56*.

To set the password via a standard HTTP connection, enter it directly in the first dialog.

To set the password via an encrypted HTTPS connection, follow these steps:

1. Click **Create self-signed certificate**.
2. Provide the requested information and click **OK**. The certificate is created and the password can now be set securely. All traffic to and from the product is encrypted from this point on.
3. Enter a password and then re-enter to confirm the spelling. Click **OK**. The password has now been configured.

Accessing the Product

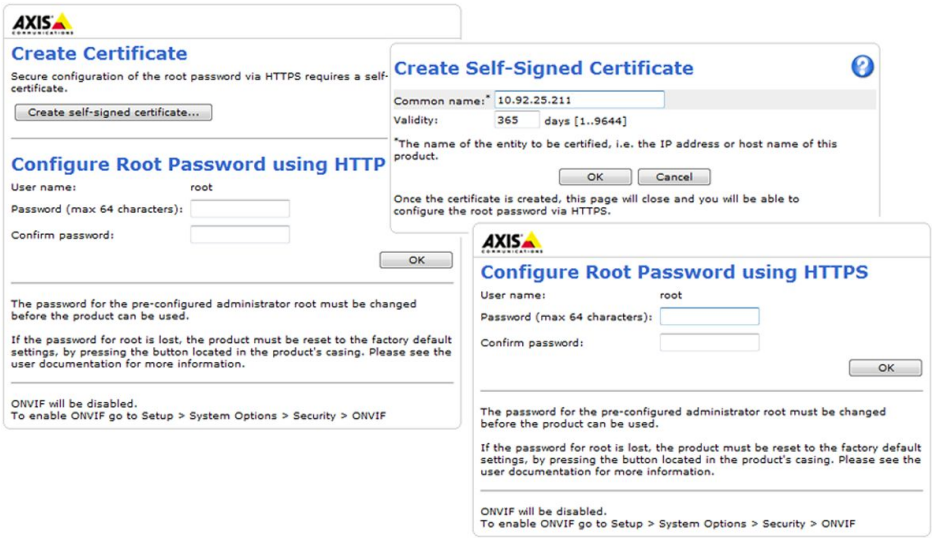

Set Power Line Frequency

Power line frequency is set the first time the Axis product is accessed and can only be changed from Plain Config (see *page 55*) or by resetting the product to factory default.

Select the power line frequency (50 Hz or 60 Hz) used at the location of the Axis product. Selecting the wrong frequency may cause image flicker if the product is used in fluorescent light environments.

When using 50 Hz, the maximum frame rate is limited to 25 fps.

Note

Power line frequency is different in different geographic regions. In the Americas, 60 Hz is usually used; most other parts of the world use 50 Hz. Local variations may apply, always check with the local authorities.

PTZ mode

PTZ mode is set the first time the Axis product is accessed and can only be changed by resetting the product to factory default.

Digital PTZ is the default mode and should be used when a pan/tilt/zoom head is **not** used.

If the camera is mounted to a pan/tilt/zoom head, select **Uploadable PTZ driver**. For instructions on how to upload a PTZ driver, see *Installing a PTZ driver, on page 32*.

The Live View Page

The controls and layout of the Live View page may have been customized to meet specific installation requirements and user preferences. Consequently, some of the examples and functions featured here may differ from those displayed in your own Live View page. The following provides an overview of each available control.

Accessing the Product

Controls on the Live View Page

Click **View size** to scale the image down to 800 pixels wide or to full scale. Only available in MJPEG.

Select a stream profile for the Live View page from the **Stream Profile** drop-down list. For information about how to configure stream profiles, see *page 23*.

Click **Pulse** to activate the product's output port for a defined period of time. For information about how to enable and configure output buttons, see *page 30*.

Click the **Active/Inactive** buttons to manually activate and inactive the product's output port. For information about how to enable and configure output buttons, see *page 30*.

The **Manual Trigger** button is used to trigger an action rule from the Live View page. For information about how to configure and enable the button, see *Manual Trigger, on page 14*.

Click **Snapshot** to save a snapshot of the video image. Right-click the video image to save it in JPEG format on your computer. This button is primarily intended for use when the AXIS Media Control viewer toolbar is not available. Enable this button from **Live View Config > Action Buttons.**

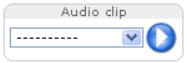

The **Audio clip** drop-down list allows you to play an audio clip from the Live View page. Select the audio clip and click the **Play** button.

Manual Trigger

The **Manual Trigger** is used to trigger an action rule from the Live View page. The manual trigger can for example be used to validate actions during product installation and configuration.

To configure the manual trigger:

1. Go to **Setup > Events**.
2. Click **Add** to add a new action rule.
3. From the **Trigger** drop-down list, select **Input Signal**.
4. From the second drop-down list, select **Manual Trigger**.
5. Select the desired action and configure the other settings as required.

For more information about action rules, see *Events, on page 39*.

To show the manual trigger buttons in the Live View page:

1. Go to **Setup > Live View Layout**.
2. Under **Action Buttons**, select **Show manual trigger button**.

AXIS Media Control viewer toolbar

The AXIS Media Control viewer toolbar is available in Internet Explorer only. See *AXIS Media Control (AMC), on page 17* for more information. The toolbar displays the following buttons:

Accessing the Product

The **Play** button connects to the Axis product and starts playing a media stream.

The **Stop** button stops the media stream.

The **Snapshot** button takes a snapshot of the video image. The location where the image is saved can be specified in the AMC Control Panel.

Click the **View Full Screen** button and the video image will fill the entire screen. Press ESC (Escape) on the computer keyboard to cancel full screen view.

The **Record** button is used to record the current video stream. The location where the recording is saved can be specified in the AMC Control Panel. Enable this button from **Live View Config** > **Viewer Settings.**

AMC Audio Controls

AMC audio buttons control the speakers and microphone connected to the client computer. The buttons are only visible when audio is enabled.

Speaker button – Click to turn the speakers on or off.

Microphone button – Click to mute or unmute the microphone. In *Simplex - speaker only mode*, the **Microphone** and **Talk** buttons must both be active to send audio to the Axis product. Click either button to stop audio transmission.

Use the slider to control the volume of the speakers and the microphone.

Half-duplex mode
The **Talk/Listen button** is used to switch between sending and receiving audio. The button can be configured from the Audio tab in the AMC Control panel:

- Push-To-Talk mode: Click and hold the button to talk/send. Release the button to listen.
- Toggle mode: Click once to switch between talking and listening.

Simplex – speaker only mode
To send audio, the **Talk** and **Microphone** buttons must both be active. Click either button to stop audio transmission.

PTZ Controls

The Live View page also displays Pan/Tilt/Zoom (PTZ) controls. The administrator can enable/disable controls for specified users under **System Options > Security > Users**.

Note

Click the **Emulate joystick mode** button and click in the image to move the camera view in the direction of the mouse pointer.

Click the **Center mode** button and click in the image to center the camera view on that position. The center mode button could also be used to zoom in on a specific area. Click in the image and drag to draw a rectangle surrounding the area to be magnified. To zoom out, rotate the mouse wheel.

Click the **Ctrl panel** button to open the PTZ control panel which provides additional PTZ controls. User-defined buttons can also appear in the Control panel. See *Controls, on page 33*.

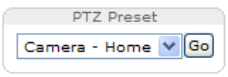

Select a PTZ preset position to steer the camera view to the saved position. See *Preset Positions, on page 32*.

Accessing the Product

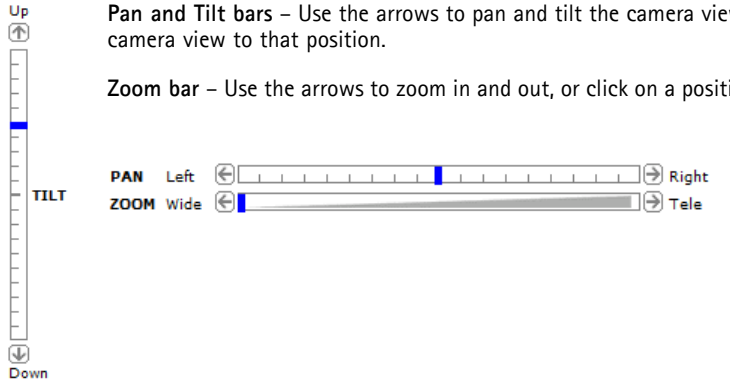

Pan and Tilt bars – Use the arrows to pan and tilt the camera view, or click on a position on the bar to steer the camera view to that position.

Zoom bar – Use the arrows to zoom in and out, or click on a position on the bar to zoom to that position.

The PTZ controls can be disabled under **PTZ > Advanced > Controls**, see *Controls, on page 33*.

Media Streams

Media Streams

The Axis product provides several audio and video stream formats. Your requirements and the properties of your network will determine the type you use.

The Live View page in the product provides access to H.264 and Motion JPEG video streams, audio streams and to the list of available stream profiles. Other applications and clients can access video and audio streams directly, without going via the Live View page.

How to Stream H.264

The video compression standard H.264 makes good use of bandwidth, and can provide high quality video streams at less than 1 Mbit/s.

Deciding which combination of protocols and methods to use depends on your viewing requirements, and on the properties of your network. The available options in AXIS Media Control are:

<table>
<tr><td>Unicast RTP</td><td>This unicast method (RTP over UDP) is used for live unicast video, especially when it is important to always have an up-to-date video stream, even if some images are dropped.</td><td rowspan="3">Unicasting is used for video-on-demand transmission so that there is no video traffic on the network until a client connects and requests the stream.
Note that there are a maximum of 20 simultaneous unicast connections.</td></tr>
<tr><td>RTP over RTSP</td><td>This unicast method (RTP tunneled over RTSP) is useful as it is relatively simple to configure firewalls to allow RTSP traffic.</td></tr>
<tr><td>RTP over RTSP over HTTP</td><td>This unicast method can be used to traverse firewalls. Firewalls are commonly configured to allow the HTTP protocol, thus allowing RTP to be tunneled.</td></tr>
<tr><td>Multicast RTP</td><td colspan="2">This method (RTP over UDP) should be used for live multicast video. The video stream is always up-to-date, even if some images are dropped.
Multicasting provides the most efficient usage of bandwidth when there are large numbers of clients viewing simultaneously. A multicast cannot however, pass a network router unless the router is configured to allow this. It is not possible to multicast over the Internet, for example.
Note also that all multicast viewers count as one unicast viewer in the maximum total of 20 simultaneous connections.</td></tr>
</table>

AXIS Media Control negotiates with the Axis product to determine the transport protocol to use. The order of priority, listed in the AMC Control Panel, can be changed and the options disabled, to suit specific requirements.

Note

H.264 is licensed technology. The Axis product includes one H.264 viewing client license. Installing additional unlicensed copies of the client is prohibited. To purchase additional licenses, contact your Axis reseller.

MJPEG

This format uses standard JPEG still images for the video stream. These images are then displayed and updated at a rate sufficient to create a stream that shows constantly updated motion.

The Motion JPEG stream uses considerable amounts of bandwidth, but provides excellent image quality and access to every image contained in the stream. The recommended method of accessing Motion JPEG live video from the Axis product is to use the AXIS Media Control in Internet Explorer in Windows.

AXIS Media Control (AMC)

AXIS Media Control (AMC) in Internet Explorer in Windows is the recommended method of accessing live video from the Axis product.

Media Streams

The AMC Control Panel can be used to configure various video and audio settings. Please see the AXIS Media Control User's Manual for more information.

The AMC Control Panel is automatically installed on first use, after which it can be configured. Open the AMC Control Panel from:

- Windows Control Panel (from the Start menu)
- Alternatively, right-click the video image in Internet Explorer and click **Settings**.

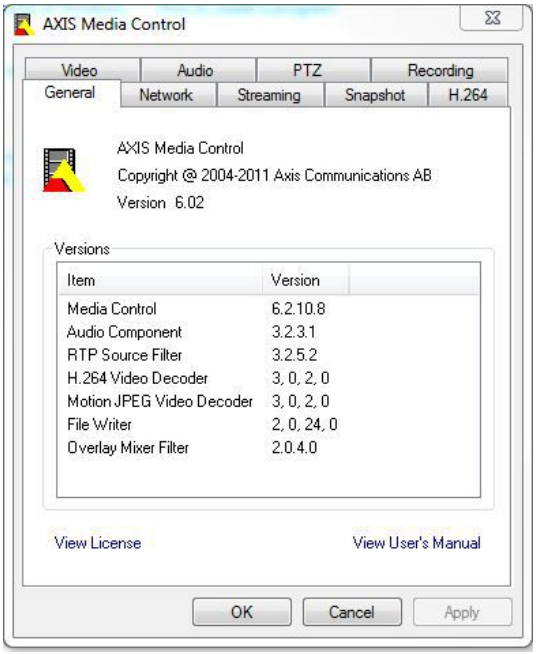

Alternative Methods of Accessing the Video Stream

You can also access video and images from the Axis product in the following ways:

- **Motion JPEG server push** (if supported by the client, Firefox, for example). This option maintains an open HTTP connection to the browser and sends data as and when required, for as long as required.
- **Still JPEG images in a browser**. Enter the path `http://<ip>/axis-cgi/jpg/image.cgi`
- **Windows Media Player**. This requires AXIS Media Control and the H.264 decoder to be installed. The following paths can be used:
  - Unicast via RTP: `axrtpu://<ip>/axis-media/media.amp`
  - Unicast via RTSP: `axrtsp://<ip>/axis-media/media.amp`
  - Unicast via RTSP, tunneled via HTTP: `axrtsphttp://<ip>/axis-media/media.amp`
  - Multicast: `axrtpm://<ip>/axis-media/media.amp`
- **QuickTime™**. The following paths can be used:
  - `rtsp://<ip>/axis-media/media.amp`
  - `rtsp://<ip>/axis-media/media.3gp`

Media Streams

Note

- <ip>= IP addess
- The Axis product supports QuickTime 6.5.1 and later.
- QuickTime adds latency to the video stream.
- It may be possible to use other players to view the H.264 stream using the paths above, although Axis does not guarantee this.

Accessing Audio Streams

The Live View page provides access to audio through AXIS Media Control; in addition audio can be accessed in the following ways:

- **VAPIX® Application Programming Interface (API)** For more information, visit www.axis.com/developer
- **Windows Media Player** supports simplex audio. The following paths can be used:
  - Unicast via RTP: `axrtpu://<ip>/axis-media/media.amp`
  - Unicast via RTSP: `axrtsp://<ip>/axis-media/media.amp`
  - Unicast via RTSP, tunneled via HTTP: `axrtsphttp://<ip>/axis-media/media.amp`
  - Multicast: `axrtpm://<ip>/axis-media/media.amp`
- **QuickTime™** supports G.711 and AAC audio encoding. The following paths can be used:
  - `rtsp://<ip>/axis-media/media.amp`
  - `rtsp://<ip>/axis-media/media.3gp`
- The **Java applet** supports simplex audio with G.711 encoding.

Setting Up the Product

The Axis product can be configured by users with administrator or operator rights. To open the product's Setup pages, click **Setup** in the top right-hand corner of the Live View page.

- **Administrators** have unrestricted access to all settings.
- **Operators** have access to all settings except System Options

See also the online help .

Basic Setup

Basic Setup provides shortcuts to the settings that should be made before using the Axis product:

1. Users. See *page 44*.
2. TCP/IP. See *page 47*.
3. Date & Time. See *page 47*.
4. Video Stream. See *page 21*.
5. Focus. See *page 20*
6. Audio Settings. See *page 26*.

The Basic Setup menu can be disabled from **System Options > Security > Users**.

Focus

You can focus the Axis product under **Video & Audio** > **Focus**. For most applications, the adjustments on the **Basic** tab are sufficient. If required, additional adjustments can be made on the **Advanced** tab. Before focusing, always click **Open iris** to open the iris to its maximum. This gives the smallest depth of field and thus best conditions for correct focusing. Click **Enable iris** when finished focusing.

Basic
Follow the on-screen instructions on the **Basic** tab to adjust zoom and focus. The pixel counter is used to determine the number of pixels in an area of the image, for example to ensure that the image size fulfills specific requirements. To position the pixel counter, click on the text and drag the window to the desired position.

Note

- The back focus (step 2) should only be reset if the camera has been focused previously.
- Set focus as precisely as possible using the focus puller on the lens (step 3) before starting the automatic fine-tuning (step 4).
- If the camera is placed so that it is difficult to look at the image and move the pullers at the same time, you can use the Focus Assistant to focus the camera; for instructions, see the Installation Guide supplied with the product.

Advanced
The tools on this page can be used to find the optimal focus position. Always open the iris before focusing and enable it when finished focusing. Focus is measured in the part of the image covered by the **Focus window**. Use the mouse to move and resize the window and then click **Fine-tune focus automatically**. If needed, click in the **Focus position** bar or on the arrows at the ends of the bar, to further adjust the focus. The buttons < and > move the focus position one step in either direction. The buttons << and >> move the focus position multiple steps in either direction. Clicking on the bar sets focus to that position. If the camera is not focused after completing the above instructions, try the Full range focus scan. The scan, which can take several minutes, transforms the focus position bar to a graph where peaks indicate the best focus positions. Click in the graph to set focus to the desired position.

Video and Audio

Video and Audio

The video and audio settings can be used to optimize video and audio quality. You can configure the following:

- Video stream settings. See *page 21*.
- Stream profiles. See *page 23*.
- Camera settings. See *page 23*.
- Overlay image. See *page 25*.
- Privacy mask. See *page 26*.
- Focus. See *page 20*.
- Audio settings. See *page 26*.
- Audio clips. See *page 28*.

Video Stream

You can define the following video stream settings from **Video & Audio** > **Video Stream**:

- Image. See *page 22*.
- H.264. See *page 22*.
- MJPEG. See *page 22*.

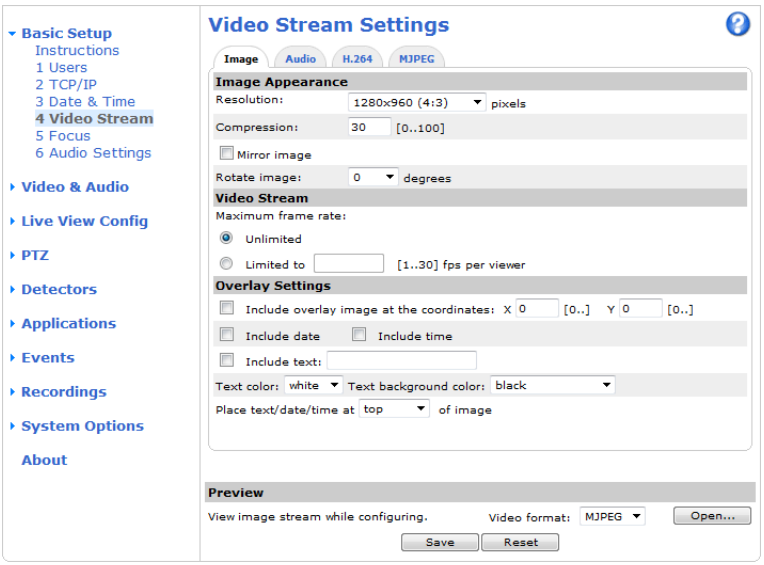

Pixel Counter

The pixel counter shows the number of pixels in an area of the image. The pixel counter is useful in situations where there is a requirement that the image is a certain size, for example in face recognition.

The pixel counter can be accessed from:

- **Video & Audio > Video Stream**. Under **Preview**, click **Open** and select the **Show pixel counter** option to enable the rectangle in the image. Use the mouse to move and resize the rectangle, or enter the number of pixels in the **Width** and **Height** fields and click **Apply**.
- **Video & Audio > Focus**. Select the **Show pixel counter** option to enable the rectangle in the image. Use the mouse to move and resize the rectangle, or enter the number of pixels in the **Width** and **Height** fields and click **Apply**.
- The Live View page in Internet Explorer in Windows. Right-click in the image and select **Pixel counter**. Use the mouse to move and resize the rectangle.

Image

The default image settings can be configured under **Video & Audio > Video Stream**. Select the **Image** tab.

The following settings are available:

- **Resolution**. Select the default resolution.
- **Compression**. The compression level affects the image quality, bandwidth and file size of saved images; the lower the compression, the higher the image quality with higher bandwidth requirements and larger file sizes.
- **Rotate image**. If required, the image can be rotated.
- **Mirror**. If required, the image can be mirrored.
- **Maximum frame rate**. To avoid bandwidth problems, the frame rate allowed to each viewer can be **Limited to** a fixed amount. Alternatively, the frame rate can be set as **Unlimited**, which means the Axis product always delivers the highest frame rate possible under the current conditions.
- **Overlay settings**. See *Overlay, on page 25*.

Click **Save** to apply the new settings.

H.264

H.264, also known as MPEG-4 Part 10/AVC, is a video compression standard that provides high quality video streams at low bit rates. An H.264 video stream consists of different types of frames such as I-frames and P-frames. An I-frame is a complete image whereas P-frames only contain the differences from previous frames.

The **GOV length** is the number of frames between two consecutive I-frames. Increasing the GOV length may save considerably on bandwidth requirements in some cases, but may also have an adverse affect on image quality.

The Axis product supports two **H.264 profiles**. The Main profile provides higher compression than the Baseline profile with the same video quality, but requires more processing power to decode.

The bit rate can be set as **Variable Bit Rate** (VBR) or **Constant Bit Rate** (CBR). VBR adjusts the bit rate according to the image complexity, using up more bandwidth for increased activity in the image, and less for lower image activity. CBR allows you to set a fixed **Target bit rate** that consumes a predictable amount of bandwidth. As the bit rate would usually need to increase for increased image activity, but in this case cannot, frame rate and image quality are affected negatively. To partly compensate for this, it is possible to prioritize either frame rate or image quality. Not setting a priority means that frame rate and image quality are equally affected. You must save your settings before they can take effect.

The current bit rate can be set to appear as text overlay. To do this, select the **Include text** check box option under **Overlay Settings** and enter the modifier `#b` in the field.

MJPEG

Sometimes the image size is large due to low light or complex scenery. Adjusting the maximum frame size helps to control the bandwidth and storage used by the Motion JPEG video stream in these situations. Setting the frame size to the **Default** setting provides consistently good image quality at the expense of increased bandwidth and storage usage in low light. Limiting the frame size optimizes bandwidth and storage usage, but may give poor image quality. To prevent increased bandwidth and storage usage, the maximum frame size should be set to an optimal value.

Video and Audio

Stream Profiles

A stream profile is a set of predefined stream settings including resolution, compression, frame rate and overlay settings. Stream profiles can be used:

- When setting up recording using action rules. See *Events, on page 39*.
- When setting up continuous recording. See *Continuous Recording, on page 43*.
- In the Live View page – select the stream profile from the **Stream profile** drop-down list.

For quick setup, use one of the predefined stream profiles. Each predefined profile has a descriptive name, indicating its purpose. If required, the predefined stream profiles can be modified and new customized stream profiles can be created.

To create a new profile or modify an existing profile, go to **Setup > Video & Audio** > **Stream Profiles**.

To select a default stream profile for the Live View page, go to **Setup > Live View Config**.

Camera Settings

The **Video & Audio > Camera Settings** page provides access to advanced image settings for the Axis product.

Image Appearance

Increasing the **Color level** increases the color saturation. The value 100 gives maximum color saturation. The value 0 gives a black and white image.

The image **Brightness** can be adjusted in the range 0–100, where a higher value produces a brighter image.

Increasing the **Sharpness** can increase bandwidth usage. A sharper image might increase image noise especially in low light conditions. A lower setting reduces image noise, but the whole image will appear less sharp.

The **Contrast** changes the relative difference between light and dark. It can be adjusted using the slidebar.

White Balance

White balance is used to make colors in the image appear the same regardless of the color temperature of the light source. The Axis product can be set to automatically identify the light source and compensate for its color. Alternatively, select the type of light source from the drop-down list. For a description of each available setting, see the online help.

The **white balance window** is enabled for the Automatic and Automatic outdoor options that appear in the **White balance** drop-down list. Select one of the options from the drop-down list to set the white balance window properties. Select **Automatic** to use the default settings for the Automatic and Automatic outdoor options (in the White balance drop-down list). Select **Custom** to manually set a reference window for white balance in the view area.

Wide Dynamic Range

Wide dynamic range (**Dynamic Contrast**) can improve the exposure when there is a considerable contrast between light and dark areas in the image. Enable WDR in intense backlight conditions. Disable WDR in low light conditions for optimal exposure.

Note

This setting is only possible when using automatic exposure control.

Exposure Settings

Configure the exposure settings to suit the image quality requirements in relation to lighting, frame rate and bandwidth considerations.

Exposure value – Click in the bar to fine-tune the exposure.

Video and Audio

Exposure control – These settings is used to adapt to the amount of light used. **Automatic** is the default settings can be used in most situations. The shutter speed is automatically set to produce optimum image quality. **Flicker-free 50 or 60 Hz** is used to remove flicker which can be caused by fluorescent and other light sources. The **Hold current** option locks the current exposure settings.

Enable Backlight compensation – Enable this option if a bright spot of light, for example a light bulb, causes other areas in the image to appear too dark.

Exposure zones – This settings determines which part of the image is used to calculate the exposure. For most situations, the **Auto** setting can be used. For particular requirement, select a predefined area.

Shutter & Gain

The shutter and gain settings affect the amount of motion blur and noise in the image. To adapt to different lighting, available storage space and bandwidth, it is often necessary to prioritize either low motion blur or low noise. The Axis product allows using different prioritization in normal light and in low light.

Shutter speed is related to the amount of time the shutter is opened and is measured in seconds (s). A slow shutter speed allows more light to reach the sensor and can help produce a brighter image in low light situations. On the other hand, a slow shutter speed can cause moving objects to appear blurry.

Set **Shutter** to

- **Auto** to set the shutter speed automatically. If required, use **Max shutter** to limit the shutter speed to prevent the frame rate from being reduced. For example, to get 30 fps, set Max shutter to 1/30.
- **Fixed** to use a fixed shutter speed.

Gain, measured in decibel (dB), is the amount of amplification applied to the image. A high gain may provide a better image in low light situations but will increase the amount of image noise.

Set **Gain** to

- **Auto** to set the gain automatically. If required, use **Max gain** to limit the applied gain.
- **Fixed** to use a fixed gain.

When **Shutter** and **Gain** are both set to **Auto**, it is possible to set the **Priority** between low motion blur and low noise manually and to use a different **Priority** in **Normal Light** and in **Low Light**.

Example

Consider an area where people or vehicles move during the day, but where there should be no movements during night. To be able to, for example, recognize faces or license plates, move the normal light priority slider toward low motion blur. At nighttime, motion detection is more important than identification. Motion blur is acceptable and since low light can cause a lot of noise, move the low light priority slider toward low noise.

Example

If storage space or bandwidth is limited, try using a lower gain. This will reduce image noise and produce smaller image files.

Iris configuration

Iris configuration shows the current configured iris type. Do not change the iris configuration unless the lens has been changed, see *Replacing the lens, on page 9*.

Iris adjustment

Select **Enable automatic iris adjustment** to automatically compensate for changing light conditions. This option is not available if a fixed iris is used.

Video and Audio

Day/Night

The IR cut filter prevents infrared (IR) light from reaching the image sensor. In poor lighting conditions, for example at night, or when using an IR lamp, set the IR cut filter to **Off**. This increases light sensitivity and allows the product to "see" infrared light. The image is shown in black and white when the IR cut filter is off.

If using automatic **Exposure control**, set the IR cut filter to **Auto** to automatically switch between **On** and **Off** according to the lighting conditions.

The **Day/Night shift level** bar helps determine when the camera will shift from day mode to night mode. Normally, the camera automatically changes mode from day to night when very dark (level 100 in the slider). By setting **Day/Night shift level** to a lower value, the camera will change to night mode earlier.

Image Settings

View Area

A view area is a cropped part of the full view. The view area is treated as a video source in **Live View** and has its own video stream and PTZ settings.

When setting up a view area it is recommended that the video stream resolution is the same size as or smaller than the view area size. Setting the video stream resolution larger than the view area size implies digitally scaled up video after sensor capture, requiring more bandwidth without adding image information.

To enable a view area, go to **Video & Audio > Camera Settings** and select **Enable View Area**.

To configure the view area:

1. Go to **Video & Audio > View Area**.
2. Select an **Aspect ratio** and a **Video stream resolution**.
3. Use the mouse to move and resize the view area.
4. Select **Enable PTZ** to enable digital PTZ for the view area.
5. Click **Save** to save the settings.

Note

The PTZ functionality is useful during installation of the Axis product. Use a view area to crop out a specific part of the full view.

Overlay

Overlays are used to provide extra information, for example for forensic video analysis or during product installation and configuration. Overlays are superimposed over the video stream.

An overlay text can display the current date and time, or a text string. When using a text string, modifiers can be used to display information such as the current bit rate or the current frame rate. For information about available modifiers, see *File Naming & Date/Time Formats* in the online help .

To enable overlays:

1. Go to **Video & Audio > Video Stream** and select the **Image** tab.
2. To include an overlay image, select **Include overlay image at the coordinates**. The overlay image must first be uploaded to the Axis product, see *Overlay Image*.
3. To include date and time, select **Include date** and **Include time**.

4. To include a text string, select **Include text** and enter the text in the field. Modifiers can be used, see *File Naming & Date/Time Formats* in the online help .
5. Define text overlay characteristics in the relevant fields.
6. Click **Save**.

To modify the date and time format, go to **System Options > Date & Time**. See *Date & Time, on page 47*.

Overlay Image

An overlay image is a static image superimposed over the video stream. The image, for example company logo, is used to provide extra information or to mask a part of the image.

Since it is static, the position and size of an overlay image will remain the same regardless of resolution and digital Pan/Tilt movements. To set up a dynamic mask, which will always mask a specified part of the monitored area, see *Privacy Mask*.

To use an overlay image, the image must first be uploaded to the Axis product:

1. Go to **Video & Audio** > **Overlay Image**.
2. Click **Browse** and browse to the file.
3. Click **Upload**.
4. Select the image to use from the **Use overlay image** list.
5. Click **Save**.

To display the overlay image:

1. Go to **Video & Audio** > **Video Stream** and select the **Image** tab.
2. Under **Overlay Settings**, select **Include overlay image at the coordinates** and enter the X and Y coordinates.
3. Click **Save**.

For information about supported image formats, see the online help .

Privacy Mask

A privacy mask is an area of solid color that prohibits users from viewing parts of the monitored area. Privacy masks cannot be bypassed via the VAPIX® Application Programming Interface (API).

The Privacy Mask List (**Video & Audio** > **Privacy Mask**) shows all the masks that are currently configured in the Axis product and indicates if they are enabled.

You can add a new mask, re-size the mask with the mouse, choose a color for the mask, and give the mask a name.

For more information, see the online help .

Important

Adding many privacy masks may affect the product's performance.

Audio Settings

The audio functionality for each video stream is enabled under **Video & Audio** > **Video Stream** > **Audio**.

Video and Audio

Audio Modes

The Axis product supports the following audio modes:

Full duplex – Simultaneous two-way audio allowing the Axis product to transmit and receive audio at the same time. There is no echo cancellation; if feedback loops appear, try moving the microphone or the speaker.

Half-duplex – Audio can be transmitted to and from the Axis product but only in one direction at a time. To transmit audio using the Live View page, use the **Talk** and **Listen** buttons, see *AMC Audio Controls, on page 15*.

Simplex — speaker only – Audio is transmitted from a client to the Axis product and can be played by a speaker connected to the product. To transmit audio using the Live View page, the **Talk** and **Microphone** buttons must both be active, see *AMC Audio Controls, on page 15*.

Simplex — microphone only – Audio captured by the product microphone is transmitted from the Axis product to one or more clients.

To set the audio mode, go to **Video & Audio > Audio Settings** and select the desired mode from the **Audio mode** drop-down list.

Audio Input

An external microphone or a line source can be connected to the product's Audio-in connector. Configure the audio input settings under **Video & Audio** > **Audio Settings**.

Note

The internal microphone on this Axis product cannot be used.

Note

The internal microphone is used by default; the external microphone is used when connected. It is possible to disable the internal microphone by connecting a plug to the mic input.

Select **Microphone** to use an external microphone or **Line** to use a Line in device, e.g. an audio mixer for multiple microphones or a microphone with a built-in amplifier, as audio source.

The **Microphone power** option provides DC power for an external microphone. Microphone power should only be used with microphones that have no battery and when using the internal microphone. This setting should not be enabled when using a dynamic or battery powered microphone. Microphone power will not harm the microphone; if you are uncertain, try switching it off and on. To use a professional microphone requiring 48 V phantom power, you need an external power supply and a balanced-unbalanced converter (audio transformer) in between.

Use the **Input gain** to control the volume (dB Full Scale) of the audio input. If the sound is too low, choose a higher dB, to amplify the sound. If the sound is too high, choose a lower dB. The **Level** bar gives a visual representation of the audio signal level in dB relative to the full-scale input level.

- Green — the signal is at a good level.
- Yellow — the signal is becoming distorted.
- Red — the signal is distorted.

Use the **Encoding** option to select digital audio encoding format.

- **AAC** requires a license for both encoding and decoding. AAC is the least complicated and most widely used codec. If achieving the best possible audio quality is a priority, AAC is the recommended codec to use. An AAC license is included in the Axis product.
- **G711** is an unlicensed standard codec that is useful when integrating audio into a VoIP system
- **G726** is an unlicensed speech codec that is most commonly used within the security industry.

The **Sample rate** defines the number of times per second the sound is sampled. A higher sample rate will provide better audio quality, but also requires a greater bandwidth.

Set the required **Bit rate** depending on the selected encoding. A higher bit rate will give better audio quality. A lower bit rate may have latency or delay, but will require less bandwidth.

For more information about these settings, please see the online help .

Audio Output

An external speaker can be connected to the product's Audio-out connector (a built-in amplifier is required for this). The output can be connected to another amplifier with speakers. A stereo connector must be used for the audio out.

Configure the audio output settings under **Video & Audio** > **Audio Settings**.

Output gain – Control the volume (dB Full Scale) of the line audio output. If the sound is too low, choose a higher dB. If the sound is too high, choose a lower dB.

Audio Clips

An audio clip is a sound file that can be played when events occur or directly from the **Live View** page. The audio clip must first be uploaded to the Axis product or recorded by a microphone connected to the product.

To add, download, modify or remove audio clips, go to **Video & Audio > Audio Clips**. For more information see the online help .

To configure the Axis product to play audio clips when an event occurs, an action rule must be set up. For more information, see *Events, on page 39*.

Note

Audio clips cannot be used if the product's audio functionality is enabled. The audio functionality is enabled on the **Audio** tab under **Video & Audio > Video Stream**.

Live View Config

Live View Config

You can customize the Live View page and alter it to suit your requirements. It is possible to define the following features of the Live View page.

- Stream Profile. See *page 23*.
- Default Viewer for Browser. See *page 29*.
- Viewer Settings. See *page 30*.
- Action Buttons. These are the buttons described in *Controls on the Live View Page, on page 14*.
- User Defined Links. See *page 30*.
- Output Buttons. See *page 30*.

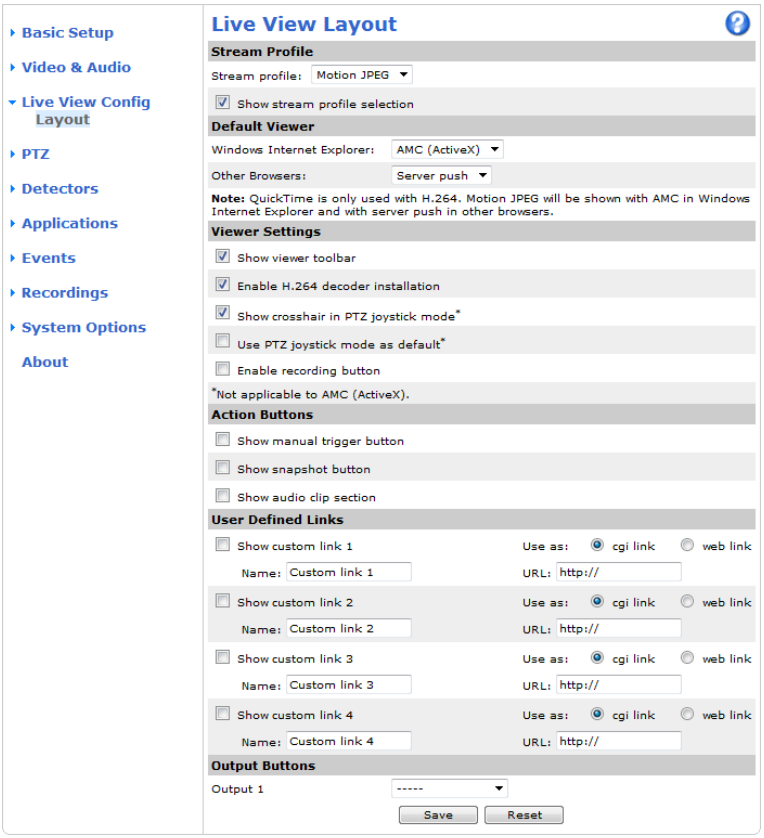

Default Viewer for Browsers

From **Live View Config** > **Default Viewer** select the default method for viewing video images in your browser. The product attempts to show the video images in the selected video format and viewer. If this is not possible, the product overrides the settings and selects the best available combination.

Live View Config

Browser	Viewer	Description
Windows Internet Explorer	AMC	Recommended viewer in Internet Explorer (H.264/Motion JPEG).
	QuickTime	H.264.
	Java applet	A slower imaging alternative to AMC (Motion JPEG). Requires one of the following installed on the client: • JVM (J2SE) 1.4.2 or higher. • JRE (J2SE) 5.0 or higher.
	Still image	Displays still images only. Click the Refresh button in your browser to view a new image.
Other browsers	Server Push	Recommended viewer for other browsers (Motion JPEG).
	QuickTime	H.264.
	Java applet	A slower imaging alternative to Server Push (Motion JPEG only).
	Still image	Displays still images only. Click the Refresh button in your browser to view a new image.

For more information, please see the online help .

Viewer Settings

To configure options for the viewer, go to **Live View Config > Viewer Settings**.

- Select **Show viewer toolbar** to display the AXIS Media Control (AMC) or the QuickTime viewer toolbar under the video image in your browser.
- **H.264 decoder installation**. The administrator can disable installation of the H.264 decoder included with AXIS Media Control. This is used to prevent installation of unlicensed copies. Further decoder licenses can be purchased from your Axis reseller.
- Select **Show crosshair in PTZ joystick mode** to enable a cross that will indicate the center of the image in PTZ joystick mode.
- Select **Use PTZ joystick mode as default** to enable joystick mode. The mode can be changed temporarily from the PTZ control panel.
- Select **Enable recording button** to enable recording from the Live View page. This button is available when using the AMC viewer. The recordings are saved to the location specified in the AMC Control Panel. See *AXIS Media Control (AMC), on page 17*.

User Defined Links

To display user-defined links in the Live View page, select the **Show custom link** option, give the link a name and then enter the URL to link to. When defining a web link do not remove the 'http://' from the URL address. Custom links can be used to run scripts or activate external devices connected to the product, or they can link to a web page. Custom links defined as cgi links will run the script in the background, in a hidden frame. Defining the link as a web link will open the link in a new window.

Output Buttons

External I/O devices connected to the Axis product's output ports can be controlled directly from the Live View page.

To display output buttons in the Live View page:

1. Go to **Setup > Live View Config**.
2. Under **Output Buttons**, select the type of control to use:

Live View Config

- **Pulse** activates the output for a defined period of time. The pulse time can be set from 1/100 second to 60 seconds.
- **Active/Inactive** displays two buttons, one or each action.

To configure the active and inactive states, go to **System Options > Ports & Devices > I/O Ports** and set the port's **Normal state**.

For more information about I/O ports, see *I/O Ports, on page 53*.

PTZ (Pan Tilt Zoom)

PTZ (Pan Tilt Zoom)

The PTZ menu is available if digital PTZ (pan, tilt and zoom) is enabled.

Preset Positions

A preset position is a predefined view that can be used to quickly steer the camera to a specific location. Preset positions can be accessed in several ways:

- When setting up action rules. See *page 39*.
- When setting up Guard Tour. See *page 33*.

To add a preset position:

1. Go to **PTZ > Preset Positions**.
2. Use the pan, tilt and zoom controls to steer the camera view to the desired position.
3. Enter a descriptive name in the **Current position** field.
4. If required, select **Use current position as Home**.
5. Click **Add**. The camera's position and focus settings are saved as a preset position.

The product can be configured to return to the Home position when the PTZ functionality has been inactive for a specified length of time. Enter the length of time in the **Return to home when inactive** field and click **Save**. Set the time to zero to prevent the product from automatically returning to the Home position.

To include the preset position name in the overlay text, go to **Video & Audio**, select **Include overlay text** and enter the modifier `#P` in the field. For more information about modifiers, see *File Naming & Date/Time Formats* in the online help .

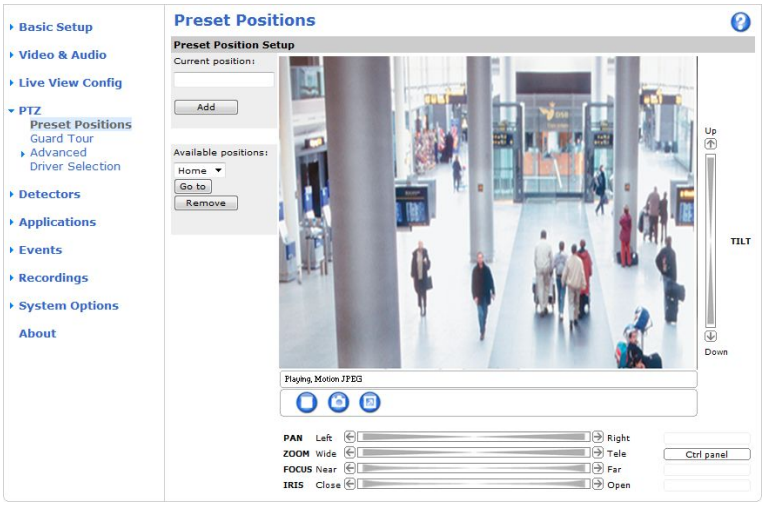

Installing a PTZ driver

This Axis product supports several PTZ devices. Please see www.axis.com for a complete list of supported devices, and to obtain the correct driver. To install a PTZ device you need to install the PTZ driver.

PTZ (Pan Tilt Zoom)

To install the PTZ driver go to **PTZ**> **Driver Selection**. **Browse** to find the driver (e.g. driver.ptz) and **Upload**. If the driver was successfully uploaded, it appears in the **Select driver to use** drop-down list. From this drop-down list, select the driver to install or remove, and click **Save**.

Select **Activate PTZ** to enable PTZ. The address of the connected device appears against **Device ID**. Choose the **Device type** from the drop-down list. To find which device type to use, consult the documentation supplied by the PTZ driver.

To complete the installation go to **System Options** > **Ports & Devices** > **COM Port** (see *COM Port*) and verify the settings.

Guard Tour

A guard tour displays the video stream from different preset positions, one-by-one, in a predetermined order or at random and for configurable time periods. The enabled guard tour will keep running after the user has logged off or closed the browser.

To add a guard tour:

1. Go to **PTZ > Guard Tour** and click **Add**.
2. Enter a descriptive name.
3. Specify the pause length between runs.
4. Select an available preset position and click **Apply**.
5. Specify the **View Time** in seconds or minutes.
6. Specify the **View Order** or select the **Random view order** option.
7. Click **Save**.

To modify or remove guard tours, go to **PTZ > Guard Tour**, select the guard tour in the **Guard Tour List** and click **Modify/Remove**.

For more information see the online help .

Note

This Axis product supports limited guard tours. The pause between successive guard tours must be set to at least 10 minutes.

Advanced

Device Settings

The Device Settings window displays driver specific settings. The appearance of this window can vary depending on the driver installed. Options that can be configured include:

- Driver Specific Settings from Video Source
- Mechanical Limits for Moving Video Source
- Light Control Video Source
- Extended Driver Specific Settings for Video Source

For download and installation information about PTZ drivers for your Axis product please visit www.axis.com/techsup/

Controls

Panel Shortcut Command Buttons can be configured to provide direct access to commands issued via the VAPIX® Application Programming Interface. The buttons will be displayed in the PTZ control panel, which is available in the Live View page through the **Ctrl panel** button, see *page 15*.

Deselect the options under **Enable/Disable controls** to disable the pan, tilt, zoom and focus controls.

PTZ (Pan Tilt Zoom)

Note

Disabling PTZ controls will not affect preset positions. For example, if the tilt control is disabled, the product can still move to preset positions that require a tilt movement.

Detectors

Detectors

Camera Tampering

Camera Tampering can generate an alarm whenever the camera is repositioned, or when the lens is covered, sprayed or severely defocused. To send an alarm, for example an email, an action rule must be set up.

To configure tampering:

1. Go to **Detectors > Camera Tampering**.
2. Set the **Minimum duration**, that is, the time that must elapse before an alarm is generated. This can help prevent false alarms for known conditions that affect the image.
3. Select **Alarm for dark images** if an alarm should be generated if lights are dimmed or turned off, or if the lens is sprayed, covered, or rendered severely out of focus.
4. Click **Save**.

To configure the product to send an alarm when tampering occurs:

1. Go to **Events > Action Rules**.
2. Click **Add** to set up a new action rule.
3. Enter a **Name** for the action rule.
4. Under **Condition**, select **Detectors** from the **Trigger** list.
5. Select **Tampering** from the list of detectors.
6. Optionally, select a schedule and set additional conditions.
7. Select the action. To send an email, select **Send Notification** and select a **Recipient** from the list of defined recipients.

Note

The **While the rule is active** option under **Duration** cannot be used with camera tampering, since camera tampering does not have a duration and once it has been triggered it will not automatically return to its untriggered state.

For more information on actions rules, see *Events, on page 39*.

Motion Detection

Motion detection is used to generate an alarm whenever movement starts or stops in the camera view.

Motion detection is configured by defining up to 10 Include and Exclude windows:

- **Include windows** – define areas where motion should be detected
- **Exclude windows** – define areas within an Include window that should be ignored (areas outside Include windows are automatically ignored).

For instructions, see *Set Up Motion Detection Windows, on page 36*.

To control the number of motion detection alarms, the parameters **Object Size**, **History** and **Sensitivity** can be adjusted. See *Motion Detection Parameters, on page 36*.

Once motion detection windows are configured, the Axis product can be configured to perform actions when motion is detected. Possible actions include uploading images and start recording. For more information, see *Setting Up an Action Rule, on page 40*.

Detectors

Note

Using the motion detection feature may decrease the product's overall performance.

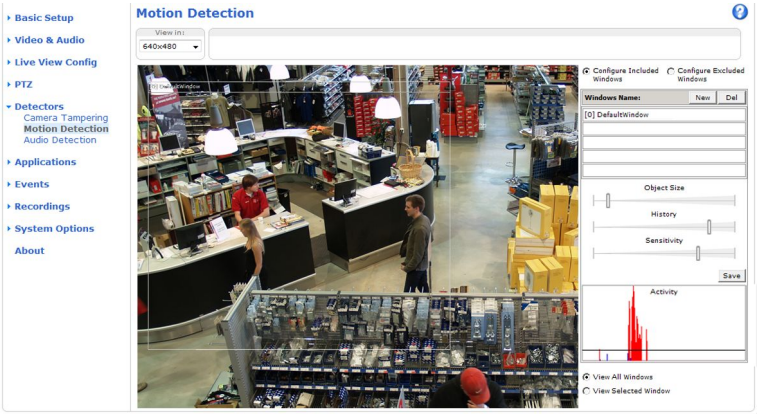

Set Up Motion Detection Windows

To set up a motion detection Include Window, follow these instructions:

1. Go to **Detectors > Motion Detection**.
2. Select the **Configure Included Windows** option and click **New**. Select the new window in the list of windows and enter a descriptive name.
3. Adjust the size (drag the bottom right-hand corner) and the position (click on the text at the top and drag to the desired position) of the window.
4. Adjust the **Object Size**, **History** and **Sensitivity** profile sliders (see *Motion Detection Parameters* for details). Any detected motion within an active window is indicated by red peaks in the **Activity window**.
5. Click **Save**.

To exclude parts of the include window, select the **Configure Excluded Windows** and position the exclude window within the include window.

To delete an include or exclude window, select the window in the list of windows and click **Del**.

Motion Detection Parameters

The parameters controlling motion detection are described in the table below:

Parameter	Object Size	History	Sensitivity
Description	Object size relative to window size.	Object memory length.	Difference in luminance between background and object.
High level (100%)	Only very large objects trigger motion detection.	An object that appears in the window triggers motion detection for a long time before it is considered as non-moving.	Ordinary colored objects on ordinary backgrounds trigger motion detection.
Medium level (50%)			A large difference in luminance is required to trigger motion detection.

Detectors

Low level (0%)	Even very small objects trigger motion detection.	An object that appears in the window triggers motion detection only for a very short time before it is considered as non-moving.	Only very bright objects on a dark background trigger motion detection.
Recommended values	5–15%	60–90%	75–95%
Default values	15%	90%	90%

Note

- To trigger on small objects or movements, use several small motion detection windows rather than one large window and select a low object size.
- To avoid triggering on small objects, select a high object size.
- If no objects should appear in the Include Window, select a high history level. This will cause motion detection to trigger as long as the object is present in the window.
- To only detect flashing light, select a low sensitivity. In other cases high sensitivity is recommended.

Audio Detection

The Axis product can be configured to generate an alarm when audio rises above or falls below the threshold value. The threshold value can be set in the range 0–100 where 0 is the most sensitive and 100 the least sensitive.

1. Go to **Detectors > Audio Detection**.
2. Set the audio alarm level and click **Save.**
3. Go to **Events > Action Rules** and set up an action rule, see *Setting Up an Action Rule, on page 40*.

Detected audio is indicated by colored peaks in the **Activity** indicator. An event is triggered when detected audio rises above or falls below the threshold value, which is represented by the bar.

Applications

Applications

Third party applications can be uploaded to and installed on the Axis product. For information about available applications, downloads, trials and licenses, go to www.axis.com/applications

To upload an application, go to **Applications > Overview**, click **Browse** to locate the file and then click **Upload Package**. Click on the uploaded application's name to open the menu options **Settings**, **License** and **About**. For configuration instructions, please refer to the documentation provided with the application.

Most applications need a **license** to run. To install the license, select the **License** menu option. If the product is connected to the Internet, **Automatic Installation** appears in the web page. If the product is not connected to the Internet, go to www.axis.com/applications to acquire a License key. You will need a license code and the product's serial number (found on the label and under **System Options > Support > System Overview**) to receive a license key.

Installed Applications lists installed applications with information about the version and the vendor, the status of the application (running or not running), and information about the license.

Use the **Start** and **Stop** buttons to start and stop the application.

To generate a log file for the application, select the application and click **Log**.

Note

It is recommended to run one application at a time. Avoid running applications when motion detection is active.

Events

Events

The Axis product can be configured to perform actions when different events occur, for example, start a recording when motion is detected. The set of conditions that defines how and when the action is triggered is called an **Action Rule**.

Available Action Rule **triggers** and **conditions** include:

- **Applications** – use installed applications to trigger the rule, see *Applications, on page 38*.
- **Detectors**
  - **Audio Detection** – trigger the rule when audio is detected, see *Audio Detection, on page 37*.
  - **Day/Night Mode** – trigger the rule when the product switches between day mode (IR cut filter on) and night mode (IR cut filter off). This can for example be used to control an external infrared (IR) light connected to an output port.
  - **Motion Detection** – trigger the rule when motion is detected, see *Motion Detection, on page 35*.
  - **Tampering** – trigger the rule when tampering is detected, see *Camera Tampering, on page 35*.
- **Hardware**
  - **Network** – trigger the rule if network connection is lost or restored. This can for example be used to start recording to the SD card.
  - **Temperature** – trigger the rule if the temperature falls outside or inside the operating range of the product. This can for example be used to send maintenance notifications.
- **Input Signal**
  - **Digital Input Port** – trigger the rule when an I/O port receives a signal from a connected device, see *I/O Ports, on page 53*.
  - **Manual Trigger** – trigger the rule using the **Manual Trigger** button in the Live View page, see *Controls on the Live View Page, on page 14*. This can for example be used to validate actions during product installation and configuration.
- **PTZ**
- **Storage**
  - **Available** – trigger the rule when the storage device is unmounted or removed. This can for example be used to send maintenance notifications.
  - **Full** – trigger the rule when the storage device is full. Under normal operation, the oldest recordings will be overwritten to prevent the storage device from becoming full.
  - **Locked** – trigger the rule if the storage device is locked (write protected).
- **System**
  - **System Initializing** – trigger the rule when the product is being started. This can for example be used to send a notification when the product restarts.
- **Time**
  - **Recurrence** – trigger the rule periodically, see *Recurrences, on page 41*. This can for example be used to upload an image every 5 minutes.
  - **Use Schedule** – trigger the rule according to the selected schedule, see *Schedules, on page 41*.

Available **actions** include:

- **Day/Night Vision Mode** – set day mode (IR cut filter on) or night mode (IR cut filter off).
- **Output Port** – activate an I/O port to control an external device.
- **Play Audio Clip** – see *Audio Clips, on page 28*.
- **PTZ Control**
  - **Preset Position** – go to a preset position.
  - **Guard Tour** – start a guard tour, see *Guard Tour, on page 33*.
- **Record Video** – record video to a selected storage.
- **Send Images** – send images to a recipient.
- **Send Notifications** – send a notification message to a recipient.
- **Status LED** – flash the LED indicator. This can for example be used to validate triggers such as motion detection during product installation and configuration.

Setting Up an Action Rule

An action rule defines the conditions that must be met for the product to perform an action, for example record video or send email notifications. If multiple conditions are defined, all must be met to trigger the action.

The following example describes how to set up an action rule to record video to a network share if there is movement in the camera's field of view.

Set up motion detection and add a network share:

1. Go to **Detectors > Motion Detection** and configure a motion detection window, see *page 36*
2. Go to **System Options > Storage** and set up the network share, see *page 53*.

Set up the action rule:

1. Go to **Events** > **Action Rules** and click **Add**.
2. Select **Enable rule** and enter a descriptive name for the rule.
3. Select **Detectors** from the **Trigger** drop-down list.
4. Select **Motion Detection** from the drop-down list. Select the motion detection window to use.
5. Optionally, select a **Schedule** and **Additional conditions**, see below.
6. Under **Actions**, select **Record Video** from the **Type** drop-down list.
7. Select a **Stream profile** and configure the **Duration** settings as described below.
8. Select Network Share from the **Storage** drop-down list.

To add additional criteria, select the **Additional conditions** option and add additional triggers. To prevent an action from being triggered repeatedly, a **Wait at least** time can be set. Enter the time in hours, minutes and seconds, during which the trigger should be ignored before the action rule can be activated again.

The recording **Duration** of some actions can be set to include time immediately before and after the event. Select **Pre-trigger time** and/or **Post-trigger time** and enter the number of seconds. When **While the rule is active** is enabled and the action is triggered again during the post-trigger time, the recording time will be extended with another post-trigger time period.

For more information, see the online help .

Events

Recipients

Recipients receive media files and notification messages. The following recipients are available:

Recipient	Use with action
Email	Send Images Send Notification
FTP	Send Images
HTTP	Send Images Send Notification
Network Share	Send Images
TCP	Send Notification

Note

A network share can also be used as a storage device for recorded video. Go to **System Options > Storage** to configure a network share before setting up a continuous recording or an action rule to record video. See *Storage, on page 52* for more information about storage devices.

To add a recipient:

1. Go to **Events > Recipients** and click **Add**.
2. Enter a descriptive name.
3. Select a recipient **Type**.
4. Enter the information needed for the recipient type.
5. Click **Test** to test the connection to the recipient.
6. Click **OK**.

Schedules

Schedules can be used as action rule triggers or as additional conditions, for example to record video if motion is detected outside office hours. Use one of the predefined schedules or create a new schedule as described below.

To create a new schedule:

1. Go to **Events > Schedules** and click **Add**.
2. Enter a descriptive name and the information needed for a daily, weekly, monthly or yearly schedule.
3. Click **OK**.

To use the schedule in an Action Rule, select the schedule from the **Schedule** drop-down list in the Action Rule Setup page.

Recurrences

Recurrences are used to trigger Action Rules repeatedly, for example every 5 minutes or every hour.

To set up a recurrence:

1. Go to **Events > Recurrences** and click **Add**.
2. Enter a descriptive name and recurrence pattern.

Events

3. Click **OK**.

To use the recurrence in an Action Rule, first select **Time** from the **Trigger** drop-down list in the Action Rule Setup page and then select the recurrence from the second drop-down list.

To modify or remove recurrences, select the recurrence in the **Recurrences List** and click **Modify** or **Remove**.

Recordings

Recordings

The Axis product can be configured to record video continuously or according to an action rule:

- To start a continuous recording, see *page 43*.
- To set up action rules, see *page 40*.
- To access recordings, see *Recording List, on page 43*.
- To configure camera controlled storage, see *Storage, on page 52*.

Recording List

Recorded videos are listed on the **Recordings > List** page. The list shows each recording's start date and time, duration and the event that triggered the recording.

To play or download a recording, follow these steps:

1. Go to **Recordings > List**.
2. Use the filter to narrow the list of recordings. Enter the desired filter criteria and click **Filter**. Some filters may take a long time to complete.
3. Select the recording.
4. Click **Play** to play the recording, or click **Download** to download the recording.

Multiple recordings can be downloaded at the same time. Select the recordings and click **Download**. The downloaded file is a zip file containing a minimum of three files, of which the Matroska (mkv) files are the actual recordings. The recordings are time-stamped with the date and time they were downloaded (that is, not the date the recordings were made).

Note

To play recordings in Windows Media Player, AXIS Matroska File Splitter must be installed. AXIS Matroska File Splitter can be downloaded from www.axis.com/techsup/software

For detailed recording and video information, select a recording and click **Properties**.

To remove a recording, select the recording and click **Remove**.

Continuous Recording

The Axis product can be configured to continuously save video to a storage device. See *Storage, on page 52* for more information about storage devices. To prevent the disk from becoming full, it is recommended to configure the disk to automatically remove old recordings. If a new stream profile is selected while a recording is ongoing, the recording will be stopped and saved in the recording list and a new recording with the new stream profile will start. All previous continuous recordings will remain in the recording list until they are removed manually or through automatic removal of old recordings.

To start a continuous recording, follow these steps:

1. Go to **Recordings > Continuous**.
2. Select **Enabled**.
3. Select type of storage device from the **Disk** list.
4. Select a **Stream profile** to use for continuous recordings.
5. Click **Save** to save and start the recording.

System Options

Security

Users

User access control is enabled by default and can be configured under **System Options > Security > Users**. An administrator can set up other users by giving them user names and passwords. It is also possible to allow anonymous viewer login, which means that anybody may access the Live View page.

The user list displays authorized users and user groups (access levels):

Viewer – Access to the Live View page

Operator – Access to the Live View page and to all settings except System Options

Administrator – Unrestricted access to all settings; can add, modify and remove other users.

Under **HTTP/RTSP Password Settings**, select the type of password to allow. You may need to allow unencrypted passwords if there are viewing clients that do not support encryption, or if you upgraded the firmware and existing clients support encryption but need to log in again and be configured to use this functionality.

Under **User Settings**, select the **Enable anonymous viewer login** option to allow anonymous users access to the Live View page.

Deselect the **Enable Basic Setup** option to hide the Basic Setup menu. Basic Setup provides quick access to settings that should be made before using the Axis product.

ONVIF

ONVIF (Open Network Video Interface Forum) is a global interface standard that makes it easier for end users, integrators, consultants, and manufacturers to take advantage of the possibilities offered by network video technology. ONVIF enables interoperablity between different vendor products, increased flexibility, reduced cost and future-proof systems.

By creating a user you automatically enable ONVIF communication. Use the user name and password with all ONVIF communication with the product. For more information see www.onvif.org

IP Address Filter

IP address filtering is enabled on the **System Options > Security > IP Address Filter** page. Once enabled, the listed IP address are allowed or denied access to the Axis product. Select **Allow** or **Deny** from the list and click **Apply** to enable IP address filtering.

The administrator can add up to 256 IP address entries to the list (a single entry can contain multiple IP addresses).

HTTPS

The Axis product supports encrypted browsing using HTTPS. This is configured on the **System Options > Security > HTTPS** page.

A **self-signed certificate** can be used until a Certificate Authority-issued certificate has been obtained. Click **Create self-signed certificate** to install a self-signed certificate. Although self-signed certificates are free and offer some protection, true security is only implemented after the installation of a signed certificate issued by a Certificate Authority.

To obtain a signed certificate from an issuing Certificate Authority, click **Create Certificate Request**. When the signed certificate is returned, click **Install signed certificate** to import the certificate. The properties of any certificate request currently resident in the product or installed can be viewed by clicking **Properties**.

To enable HTTPS in the Axis product, the **HTTPS Connection Policy** must be set for each user group.

For more information, see the online help .

System Options

HTTPS

HTTPS (HyperText Transfer Protocol over Secure Socket Layer, or HTTP over SSL) is a web protocol providing encrypted browsing. HTTPS can also be used by users and clients to verify that the correct device is being accessed. The security level provided by HTTPS is considered adequate for most commercial exchanges.

The Axis product can be configured to require HTTPS when users from different user groups (administrator, operator, viewer) connect.

To use HTTPS, an HTTPS certificate must first be installed. Go to **System Options > Security > Certificates** to install and manage certificates. See .

To enable HTTPS on the Axis product:

1. Go to **System Options > Security > HTTPS**
2. Select an HTTPS certificate from the list of installed certificates.
3. Optionally, click **Ciphers** and select the encryption algorithms to use for SSL.
4. Set the **HTTPS Connection Policy** for the different user groups.
5. Click **Save** to enable the settings.

To access the Axis product via the desired protocol, enter `https://` or `http://` in the address field in a browser.

The HTTPS port can be changed on the **System Options > Network > TCP/IP > Advanced** page.

IEEE 802.1X

IEEE 802.1X is a standard for port-based Network Admission Control providing secure authentication of wired and wireless network devices. IEEE 802.1X is based on EAP (Extensible Authentication Protocol).

To access a network protected by IEEE 802.1X, devices must authenticate themselves. The authentication is performed by a third-party entity called an authentication server, typically a **RADIUS server**, examples of which are FreeRADIUS and Microsoft Internet Authentication Service.

In Axis' implementation, the network device and the authentication server authenticate themselves with the help of digital certificates using EAP-TLS (Extensible Authentication Protocol - Transport Layer Security). The certificates are provided by an **Certification Authority** (CA). You need:

- a CA certificate to validate the identity of the authentication server
- a CA-signed client certificate and a private key to authenticate the network device.

To allow the network device to access a network protected by IEEE 802.1X:

1. Obtain a CA certificate, a client certificate and a client private key (contact your network administrator).
2. Go to **Setup > System Options > Security > IEEE 802.1X** and upload the CA certificate, the client certificate and the client private key.
3. Under **Settings**, select the EAPOL version, provide your EAP identity and private key password.
4. Check the box to enable IEEE 802.1X and click **Save**.

System Options

Certificates	
CA Certificate	The CA certificate is used to validate the identity of the authentication server. Enter the path to the certificate directly, or locate the file using the **Browse** button. Then click **Upload**. To remove a certificate, click **Remove**.
Client certificate **Client private key**	The client certificate and private key are used to authenticate the network device. They can be uploaded as separate files or in one combined file (e.g. a PFX file or a PEM file). Use the **Client private key** field if uploading one combined file. For each file, enter the path to the file, or locate the file using the **Browse** button. Then click **Upload**. To remove a file, click **Remove**.
Settings	
EAPOL version	Select the EAPOL version (1 or 2) as used in your network switch.
EAP identity	Enter the user identity (maximum 16 characters) associated with your certificate.
Private key password	Enter the password (maximum 16 characters) for the private key.
Enable IEEE 802.1X	Check the box to enable the IEEE 802.1X protocol.

IEEE 802.1X

IEEE 802.1X is a standard for port-based Network Admission Control providing secure authentication of wired and wireless network devices. IEEE 802.1X is based on EAP (Extensible Authentication Protocol).

To access a network protected by IEEE 802.1X, devices must be authenticated. The authentication is performed by an authentication server, typically a **RADIUS server**, examples of which are FreeRADIUS and Microsoft Internet Authentication Service.

In Axis implementation, the Axis product and the authentication server identify themselves with digital certificates using EAP-TLS (Extensible Authentication Protocol - Transport Layer Security). The certificates are provided by a **Certification Authority** (CA). You need:

- a CA certificate to authenticate the authentication server
- a CA-signed client certificate to authenticate the Axis product.

To create and install certificates, go to **System Options > Security > Certificates**. See . Many CA certificates are preinstalled.

To allow the product to access a network protected by IEEE 802.1X:

1. Go to **System Options > Security > IEEE 802.1X**.
2. Select a **CA Certificate** and a **Client Certificate** from the lists of installed certificates.
3. Under **Settings**, select the EAPOL version and provide the EAP identity associated with the client certificate.
4. Check the box to enable IEEE 802.1X and click **Save**.

Note

For authentication to work properly, the date and time settings in the Axis product should be synchronized with an NTP server. See *Date & Time, on page 47*.

Audio Support

Select **Enable audio support** to allow clients to retrieve audio streams from the Axis product. For information on how to configure audio settings, see *Audio Settings, on page 26*.

Note

Deselecting this option will disable audio globally in the Axis product, for configured events and profiles with audio as well.

System Options

Date & Time

The Axis product's date and time settings are configured under **System Options > Date & Time**.

Current Server Time displays the current date and time (24h clock). The time can be displayed in 12h clock in the text overlay (see below).

To change the date and time settings, select the preferred **Time mode** under **New Server Time**:

- **Synchronize with computer time** sets date and time according to the computer's clock. With this option, date and time are set once and will not be updated automatically.
- **Synchronize with NTP Server** obtains date and time from an NTP server. With this option, date and time settings are updated continuously. For information on NTP settings, see *NTP Configuration, on page 49*.

  If using a host name for the NTP server, a DNS server must be configured. See *DNS Configuration, on page 49*.
- **Set manually** allows you to manually set date and time.

If using an NTP server, select your **Time zone** from the drop-down list. If required, check **Automatically adjust for daylight saving time changes**.

The **Date & Time Format Used in Images** is the date and time format displayed as a text overlay in the video stream. Use the predefined formats or see *File Naming & Date/Time Formats* in the online help for information on how to create custom date and time formats. To include date and time in the overlay text, go to **Video & Audio** and select **Include date** and **Include time**.

Network

Basic TCP/IP Settings

The Axis product supports IP version 4 and IP version 6. Both versions can be enabled simultaneously, and at least one version must always be enabled.

IPv4 Address Configuration

By default, the Axis product is set to use IPv4 (IP version 4) and to obtain the IP address automatically via DHCP. The IPv4 settings are configured under **System Options > Network > TCP/IP > Basic**.

DHCP (Dynamic Host Configuration Protocol) allows network administrators to centrally manage and automate the assignment of IP addresses. DHCP should only be enabled if using dynamic IP address notification, or if the DHCP can update a DNS server. It is then possible to access the Axis product by name (host name).

If DHCP is enabled and the product cannot be accessed, run AXIS IP Utility to search the network for connected Axis products, or reset the product to the factory default settings (see *page 56*) and then perform the installation again.

To use a static IP address, check **Use the following IP address** and specify the IP address, subnet mask and default router.

IPv6 Address Configuration

If IPv6 (IP version 6) is enabled, the Axis product will receive an IP address according to the configuration in the network router.

To enable IPv6, go to **System Options > Network > TCP/IP > Basic**. Other settings for IPv6 should be configured in the network router.

ARP/Ping

The product's IP address can be assigned using ARP and Ping. For instructions, see *Assign IP Address using ARP/Ping, on page 48*.

The ARP/Ping service is enabled by default but is automatically disabled two minutes after the product is started, or as soon as an IP address is assigned. To re-assign IP address using ARP/Ping, the product must be restarted to enable ARP/Ping for an additional two minutes.

To disable the service, go to **System Options > Network > TCP/IP > Basic** and clear the option **Enable ARP/Ping setting of IP address**.

Pinging the product is still possible when the service is disabled.

Assign IP Address using ARP/Ping

The product's IP address can be assigned using ARP/Ping. The command must be issued within 2 minutes of connecting power.

1. Acquire a free static IP address on the same network segment as the computer.
2. Locate the serial number (S/N) on the product label.
3. Open a command prompt and enter the following commands:

   Linux/Unix syntax

   ```
   arp -s <IP address> <serial number> temp
   ping -s 408 <IP address>
   ```

   Linux/Unix example

   ```
   arp -s 192.168.0.125 00:40:8c:18:10:00 temp
   ping -s 408 408 192.168.0.125
   ```

   Windows syntax (this may require that you run the command prompt as an administrator)

   ```
   arp -s <IP address> <serial number>
   ping -l 408 -t <IP address>
   ```

   Windows example (this may require that you run the command prompt as an administrator)

   ```
   arp -s 192.168.0.125 00-40-8c-18-10-00
   ping -l 408 -t 192.168.0.125
   ```

4. Check that the network cable is connected to the Axis product and then restart the product by disconnecting and reconnecting power.
5. Close the command prompt when the product responds with `Reply from 192.168.0.125:...` or similar.
6. Open a browser and type `http://<IP address>` in the Location/Address field.

For other methods of assigning the IP address, see the Installation and Management Software CD or the document *Assign an IP Address and Access the Video Stream* on Axis Support web at www.axis.com/techsup

Note

- To open a command prompt in Windows, open the **Start menu** and type `cmd` in the **Run/Search** field.
- To use the ARP command in Windows 7/Windows Vista, right-click the command prompt icon and select **Run as administrator**.
- To open a command prompt in Mac OS X, open the **Terminal utility** from **Application > Utilities**.

AXIS Video Hosting System (AVHS)

AVHS used in conjunction with an AVHS service, provides easy and secure Internet access to live and recorded video accessible from any location. For more information and help to find a local AVHS Service Provider go to www.axis.com/hosting

AVHS is enabled by default. The settings are configured under **System Options > Network > TCP IP > Basic**.

One-click enabled – Press the product's control button (see *Hardware Overview, on page 6*) to connect to an AVHS service over the Internet. Once registered, **Always** will be enabled and the Axis product stays connected to the AVHS service. If the product is not registered within 24 hours from when the button is pressed, the product will disconnect from the AVHS service.

Always – The Axis product will constantly attempt to connect to the AVHS service over the Internet. Once registered the product will stay connected to the service. This option can be used when the product is already installed and it is not convenient to use the one-click installation.

AXIS Internet Dynamic DNS Service

AXIS Internet Dynamic DNS Service assigns a host name for easy access to the product. For more information, see www.axiscam.net

To register the Axis product with AXIS Internet Dynamic DNS Service, go to **System Options > Network > TCP/IP > Basic**. Under **Services**, click the AXIS Internet Dynamic DNS Service **Settings** button (requires access to the Internet). The domain name currently registered at AXIS Internet Dynamic DNS service for the product can at any time be removed.

Advanced TCP/IP Settings

DNS Configuration

DNS (Domain Name Service) provides the translation of host names to IP addresses. The DNS settings are configured under **System Options > Network > TCP/IP > Advanced**.

Select **Obtain DNS server address via DHCP** to use the DNS settings provided by the DHCP server.

To make manual settings, select **Use the following DNS server address** and specify the following:

Domain name – Enter the domain(s) to search for the host name used by the Axis product. Multiple domains can be separated by semicolons. The host name is always the first part of a fully qualified domain name, for example, `myserver` is the host name in the fully qualified domain name `myserver.mycompany.com` where `mycompany.com` is the domain name.

Primary/Secondary DNS server – Enter the IP addresses of the primary and secondary DNS servers. The secondary DNS server is optional and will be used if the primary is unavailable.

NTP Configuration

NTP (Network Time Protocol) is used to synchronize the clock times of devices in a network. The NTP settings are configured under **System Options > Network > TCP/IP > Advanced**.

Select **Obtain NTP server address via DHCP** to use the NTP settings provided by the DHCP server.

To make manual settings, select **Use the following NTP server address** and enter the host name or IP address of the NTP server.

Host Name Configuration

The Axis product can be accessed using a host name instead of an IP address. The host name is usually the same as the assigned DNS name. The host name is configured under **System Options > Network > TCP/IP > Advanced**.

Select **Obtain host name via IPv4 DHCP** to use host name provided by the DHCP server running on IPv4.

Select **Use the host name** to set the host name manually.

Select **Enable dynamic DNS updates** to dynamically update local DNS servers whenever the Axis product's IP address changes.

For more information, see the online help .

Link-Local IPv4 Address

Link-Local Address is enabled by default and assigns the Axis product an additional IP address which can be used to access the product from other hosts on the same segment on the local network. The product can have a Link-Local IP and a static or DHCP-supplied IP address at the same time.

This function can be disabled under **System Options > Network > TCP/IP > Advanced**.

System Options

HTTP

The HTTP port used by the Axis product can be changed under **System Options > Network > TCP/IP > Advanced**. In addition to the default setting, which is 80, any port in the range 1024–65535 can be used.

HTTPS

The HTTPS port used by the Axis product can be changed under **System Options > Network > TCP/IP > Advanced**. In addition to the default setting, which is 443, any port in the range 1024–65535 can be used.

To enable HTTPS, go to **System Options > Security > HTTPS**. For more information, see *page 44*.

NAT traversal (port mapping) for IPv4

A network router allows devices on a private network (LAN) to share a single connection to the Internet. This is done by forwarding network traffic from the private network to the "outside", that is, the Internet. Security on the private network (LAN) is increased since most routers are pre-configured to stop attempts to access the private network (LAN) from the public network (Internet).

Use **NAT traversal** when the Axis product is located on an intranet (LAN) and you wish to make it available from the other (WAN) side of a NAT router. With NAT traversal properly configured, all HTTP traffic to an external HTTP port in the NAT router is forwarded to the product.

NAT traversal is configured under **System Options > Network > TCP/IP > Advanced**.

Note

- For NAT traversal to work, this must be supported by the router. The router must also support UPnP™.
- The router has many different names: "NAT router", "Network router", "Internet Gateway", "Broadband router", "Broadband sharing device" or "Home firewall" but the essential purpose of the device is the same.

Enable/Disable – When enabled, the Axis product attempts to configure port mapping in a NAT router on your network, using UPnP™. Note that UPnP™ must be enabled in the product (see **System Options > Network > UPnP**).

Use manually selected NAT router – Select this option to manually select a NAT router and enter the IP address for the router in the field. If no router is specified, the product automatically searches for NAT routers on your network. If more than one router is found, the default router is selected.

Alternative HTTP port – Select this option to manually define an external HTTP port. Enter the port number in the field. If no port is entered here, a port number is automatically selected when NAT traversal is enabled.

Note

- An alternative HTTP port can be used or be active even if NAT traversal is disabled. This is useful if your NAT router does not support UPnP and you need to manually configure port forwarding in the NAT router.
- If you attempt to manually enter a port that is already in use, another available port is automatically selected.
- When the port is selected automatically it is displayed in this field. To change this, enter a new port number and click **Save**.

FTP

The FTP server running in the Axis product enables upload of new firmware, user applications, etc. The FTP server can be disabled under **System Options > Network > TCP/IP > Advanced**.

Note

This FTP server has nothing to do with the product's ability to transfer images via FTP to other locations and servers.

RTSP

The RTSP server running in the Axis product allows a connecting client to start an H.264 stream. The RTSP port number can be changed under **System Options > Network > TCP/IP > Advanced**. The default port is 554.

System Options

Note

H.264 video streams will not be available if the RTSP server is disabled.

SOCKS

SOCKS is a networking proxy protocol. The Axis product can be configured to use a SOCKS server to reach networks on the other side of a firewall or proxy server. This functionality is useful if the Axis product is located on a local network behind a firewall, and notifications, uploads, alarms, etc need to be sent to a destination outside the local network (for example the Internet).

SOCKS is configured under **System Options > Network > SOCKS**. For more information, see the online help .

QoS (Quality of Service)

QoS (Quality of Service) guarantees a certain level of a specified resource to selected traffic on a network. A QoS-aware network prioritizes network traffic and provides a greater network reliability by controlling the amount of bandwidth an application may use.

The QoS settings are configured under **System Options > Network > QoS**. Using DSCP (Differentiated Services Codepoint) values, the Axis product can mark the following types of traffic: live video, live audio, event/alarm traffic and management traffic.

Note

Live audio DSCP will be equal to live video DSCP if H.264 over RTSP is used.

SMTP (email)

To send email messages from the Axis product via SMTP (Simple Mail Transfer Protocol), an SMTP mail server must be set up. This is done under **System Options > Network > SMTP (email)**.

Enter the host names or IP addresses and port numbers for the primary and secondary mail servers in the fields provided. A **From email address** is also required. If the mail server requires authentication, check **Use authentication to log in to this server** and enter the necessary information.

SNMP

The Simple Network Management Protocol (SNMP) allows remote management of network devices. An SNMP community is the group of devices and management station running SNMP. Community names are used to identify groups.

The Axis product can be configured to support SNMP on the **System Options > Network > SNMP** page.

Depending on the level of security required, select the version on SNMP to use.

SNMP v1/v2 provides the lowest level of security. The community name can be specified as a password for read or read/write access to all supported SNMP devices. The default password for the **Read community** is public and the default password for the **Write community** is write.

Note

If HTTPS is enabled, SNMP v1 and SNMP v2c should be disabled.

Traps for SNMP v1/v2 are used by the Axis product to send messages to a management system on important events and status changes. Check **Enable traps** and enter the IP address where the trap message should be sent and the **Trap community** that should receive the message.

The following traps are available:

- Cold start
- Warm start
- Link up
- Authentication failed

System Options

SNMP v3 provides encryption and secure passwords. To use traps with SNMP v3, an SNMP v3 management application is required.

To use SNMP v3, HTTPS must be enabled, see *HTTPS, on page 44*. To enable SNMP v3, check the box and provide the initial user password.

Note

The initial password can only be set once. If the password is lost, the Axis product must be reset to factory default, see *Reset to Factory Default Settings, on page 56*.

UPnP™

The Axis product includes support for UPnP™. UPnP™ is enabled by default and the product is automatically detected by operating systems and clients that support this protocol.

UPnP™ can be disabled under **System Options > Network > UPnP™**.

RTP/H.264

The RTP port range and multicast settings are configured under **System Options > Network > RTP**.

The RTP port range defines the range of ports from which the video/audio ports are automatically selected. For multicast streams, only certain IP addresses and port numbers should be used.

Select **Always Multicast Video** and/or **Always Multicast Audio** to start multicast streaming without opening an RTSP session.

Bonjour

The Axis product includes support for Bonjour. Bonjour is enabled by default and the product is automatically detected by operating systems and clients that support this protocol.

Bonjour can be disabled under **System Options > Network > Bonjour**.

Storage

SD Card

NOTICE

To prevent corruption of recordings, the SD card should always be unmounted before it is ejected.

The Axis product supports SD cards with the following file systems:

- **ext4** – recommended due to its resilience against data loss if the card is ejected or if there is abrupt power loss. To access data stored on the card from the Windows operating system, a third-party ext4 driver or application is required.
- **vFAT** – most SD cards are pre-formatted with vFAT when purchased.

If required, the SD card can be re-formatted to the desired file system. To format the SD card:

1. Insert the SD card in the SD card slot.
2. Go to **System Options > Storage** and click **SD Card**.
3. Click **Format** and select the desired file system.

Note

During formatting any previous data stored on the disk will be lost.

Mounting is done automatically when the card is inserted or when the product is started. A manual mount is only required if the card has been unmounted and not ejected and re-inserted.

System Options

To unmount the SD card:

1. Go to **System Options > Storage** and click **SD Card**.
2. Click **Unmount**.
3. The card can now be removed.

The SD card is managed on the **System Options > Storage** page. Click **SD Card** to open **Storage Management**.

If the card's status shows as failed, click **Check disk** to see if the problem can be found and then try **Repair**. This option is only available for SD cards with ext4. For SD cards with vFAT, use a card reader or computer to troubleshoot the card.

To avoid filling the card, it is recommended to remove recordings continuously. Under **Recording Settings**, select **Remove recordings older than** and select the number of days or weeks.

To stop writing to the card and protect recordings from being removed, select **Lock** under **Recording Settings**.

Network Share

Network share allows you to add network storage such as a NAS (Network Attached Storage) or any server that uses CIFS (Common Internet File System) and use them for storage of recordings.

To add a network share:

1. Go to **System Options > Storage**.
2. Click **Network Share**.
3. Enter the IP address, DNS or Bonjour name to the host server in the **Host** field.
4. Enter the name of the share in the **Share** field. Sub folders cannot be used.
5. If required, select **The share requires login** and enter the user name and password.
6. Click **Connect**.

To clear all recordings and data from the Axis product's folder on the designated share, click **Clear** under **Storage Tools**.

To avoid filling the share, it is recommended to remove recordings continuously. Under **Recording Settings**, select **Remove recordings older than** and select the number of days or weeks.

To stop writing to the share and protect recordings from being removed, select **Lock** under **Recording Settings**.

Ports & Devices

I/O Ports

The Axis product provides one input port and one output port for connection of external devices. For information on how to connect external devices, see *Connectors, on page 7*.

The I/O ports are configured under **System Options > Ports & Devices > I/O Ports**. The ports can be given descriptive names and their **Normal states** can be configured as **Open circuit** or **Grounded circuit**.

COM Port

The Axis product has one RS-485/RS-422 serial port. The port supports the following modes:

- **Generic HTTP** allows the Axis product to receive data and send commands via HTTP.
- **Pan Tilt Zoom** is used to control a PTZ device. The PTZ device requires a driver. See *Installing a PTZ driver* for more information. Drivers can be downloaded from www.axis.com

System Options

- **Generic TCP/IP**allows the Axis product to receive data and send commands via TCP/IP. Daisy chain server - Allows Daisy chain clients to communicate with the Axis product.

Select the desired **Port Type** from the drop-down list. For more information on **Serial Port Settings** and **Daisy Chain Port Settings** see the online help .

Port Status

The list on the **System Options > Ports & Devices > Port Status** page shows the status of the product's input and output ports.

Maintenance

The Axis product provides several maintenance functions. These are available under **System Options > Maintenance**.

Click **Restart** to perform a correct restart if the Axis product is not behaving as expected. This will not affect any of the current settings.

Click **Restore** to reset most settings to the factory default values. The following settings are not affected:

- the boot protocol (DHCP or static)
- the static IP address
- the default router
- the subnet mask
- the system time
- the IEEE 802.1X settings
- the focus position

Click **Default** to reset all settings, including the IP address, to the factory default values. This button should be used with caution. The Axis product can also be reset to factory default using the control button, see *Reset to Factory Default Settings, on page 56*.

To identify the product or test the Status LED, click **Flash LED** under **Identify** and specify the duration in seconds, minutes or hours. This can be useful for identifying the product among other products installed in the same location.

For information about firmware upgrade, see *Upgrading the Firmware, on page 57*.

Support

Support Overview

The **System Options > Support > Support Overview** page provides information on troubleshooting and contact information, should you require technical assistance.

See also *Troubleshooting, on page 57*.

System Overview

To get an overview of the Axis product's status and settings, go to **System Options > Support > System Overview**. Information that can be found here includes firmware version, IP address, network and security settings, event settings, image settings and recent log items. Many of the captions are links to the proper Setup page.

Logs & Reports

The **System Options > Support > Logs & Reports** page generates logs and reports useful for system analysis and troubleshooting. If contacting Axis Support, please provide a valid Server Report with your query.

System Options

System Log – Provides information about system events.

Access Log – Lists all failed attempts to access the product. The Access Log can also be configured to list all connections to the product (see below).

Server Report – Provides information about the product status in a pop-up window. The Access Log is automatically included in the Server Report.

You can view or download the server report. Downloading the server report creates a .zip file that contains a complete server report text file in UTF–8 format. Select the **Include snapshot with default image settings** option to include a snapshot of the product's Live View that also shows the settings specified under **Video Stream**>**Image**>**Image Appearance**. The server report .zip file should always be included when contacting support.

Parameter List – Shows the product's parameters and their current settings. This may prove useful when troubleshooting or when contacting Axis Support.

Connection List – Lists all clients that are currently accessing media streams.

Crash Report – Generates an archive with debugging information. The report takes several minutes to generate.

The log levels for the System Log and the Access Log are set under **System Options > Support > Logs & Reports > Configuration**. The Access Log can be configured to list all connections to the product (select Critical, Warnings & Info).

Advanced

Scripting

Scripting allows experienced users to customize and use their own scripts.

NOTICE

Improper use may cause unexpected behavior and loss of contact with the Axis product.

Axis strongly recommends that you do not use this function unless you understand the consequences. Axis Support does not provide assistance for problems with customized scripts.

To open the Script Editor, go to **System Options > Advanced > Scripting**. If a script causes problems, reset the product to its factory default settings, see *page 56*.

For more information, see www.axis.com/developer

File Upload

Files, for example web pages and images, can be uploaded to the Axis product and used as custom settings. To upload a file, go to **System Options > Advanced > File Upload**.

Uploaded files are accessed through `http://<ip address>/local/<user>/<file name>` where `<user>` is the selected user group (viewer, operator or administrator) for the uploaded file.

Plain Config

Plain Config is for advanced users with experience of Axis product configuration. Most parameters can be set and modified from this page. Help is available from the standard help pages.

To open Plain Config, go to **System Options > Advanced > Plain Config**. Axis Support does not provide assistance.

System Options

Reset to Factory Default Settings

Important

Reset to factory default should be used with caution. A reset to factory default will reset all settings, including the IP address, to the factory default values.

To reset the product to the factory default settings:

1. Disconnect power from the product.
2. Press and hold the control button and reconnect power. See *Hardware Overview, on page 6*.
3. Keep the control button pressed for about 15 seconds until the status LED indicator flashes amber.
4. Release the control button. The process is complete when the status LED indicator turns green. The product has been reset to the factory default settings. If no DHCP server is available on the network, the default IP address is `192.168.0.90`
5. Use the tools provided on the Installation and Management Software CD to assign an IP address, set the password and access the video stream. This information is also available from the support pages on *www.axis.com/techsup*
6. Refocus the product.

It is also possible to reset parameters to factory default via the web interface. Go to **Setup > System Options > Maintenance**.

Troubleshooting

Checking the Firmware

Firmware is software that determines the functionality of network devices. One of your first actions when troubleshooting a problem should be to check the current firmware version. The latest version may contain a correction that fixes your particular problem. The current firmware version in the Axis product is displayed in the page **Setup > Basic Setup** and in **Setup > About**.

Upgrading the Firmware

When you upgrade the product with the latest firmware from Axis website, the product receives the latest functionality available. Always read the upgrade instructions and release notes available with each new release, before upgrading the firmware.

To upgrade, follow these instructions:

1. Save the firmware file to your computer. The latest version of the firmware is available free of charge from Axis website at www.axis.com/techsup
2. Go to **Setup > System Options > Maintenance** in the products web pages.
3. Under **Upgrade Server**, click **Browse** and locate the file on your computer. Click **Upgrade**.

After starting the upgrade process, always wait at least 5–10 minutes before restarting the product, even if you suspect the upgrade has failed.

AXIS Camera Management can be used for multiple upgrades. See www.axis.com for more information.

Note

- Your dealer reserves the right to charge for any repair attributable to faulty upgrade by the user.
- Preconfigured and customized settings are saved when the firmware is upgraded (providing the features are available in the new firmware) although this is not guaranteed by Axis Communications AB.

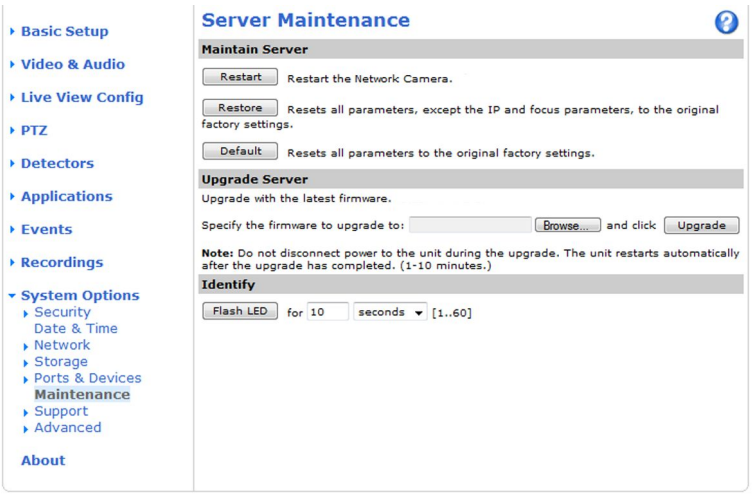

Emergency Recovery Procedure

If power or network connection is lost during the upgrade, the process fails and the product becomes unresponsive. Flashing red Status indicator indicates a failed upgrade. To recover the product, follow the steps below. The serial number is found on the product's label.

1. In **UNIX/Linux**, type the following from the command line:

```
arp -s <IP address> <serial number> temp
ping -s 408 <IP address>
```

In **Windows**, type the following from a command/DOS prompt (this may require that you run the command prompt as an administrator):

```
arp -s <IP address> <serial number>
ping -l 408 -t <IP address>
```

2. If the product does not reply in 30 seconds, restart it and wait for a reply. Press CTRL+C to stop Ping.
3. Open a browser and type in the product's IP address. In the page that appears, use the **Browse** button to select the upgrade file to use. Then click **Load** to restart the upgrade process.
4. After the upgrade is complete (1–10 minutes), the product automatically restarts and shows a steady green on the Status indicator.
5. Reinstall the product, referring to the Installation Guide.

If the emergency recovery procedure does not get the product up and running again, contact Axis support at www.axis.com/techsup/

Symptoms, Possible Causes and Remedial Actions

Problems setting the IP address	
When using ARP/Ping	Try the installation again. The IP address must be set within two minutes after power has been applied to the product. Ensure the Ping length is set to 408. For instructions, see *Assign IP Address using ARP/Ping, on page 48*.
The product is located on a different subnet	If the IP address intended for the product and the IP address of the computer used to access the product are located on different subnets, you will not be able to set the IP address. Contact your network administrator to obtain an IP address.
The IP address is being used by another device	Disconnect the Axis product from the network. Run the Ping command (in a Command/DOS window, type `ping` and the IP address of the product: • If you receive: `Reply from <IP address>: bytes=32; time=10...` this means that the IP address may already be in use by another device on the network. Obtain a new IP address from the network administrator and reinstall the product. • If you receive: `Request timed out`, this means that the IP address is available for use with the Axis product. Check all cabling and reinstall the product.
Possible IP address conflict with another device on the same subnet.	The static IP address in the Axis product is used before the DHCP server sets a dynamic address. This means that if the same default static IP address is also used by another device, there may be problems accessing the product.

The product cannot be accessed from a browser	
Cannot log in	When HTTPS is enabled, ensure that the correct protocol (HTTP or HTTPS) is used when attempting to log in. You may need to manually type `http` or `https` in the browser's address field. If the password for the user root is lost, the product must be reset to the factory default settings. See *Reset to Factory Default Settings, on page 56*.

Troubleshooting

The IP address has been changed by DHCP	IP addresses obtained from a DHCP server are dynamic and may change. If the IP address has been changed, use AXIS IP Utility or AXIS Camera Management to located the product on the network. Identify the product using its model or serial number, or by the DNS name (if the name has been configured). If required, a static IP address can be assigned manually. For instructions, see the Installation and Management Software CD or the document *Assign an IP Address and Access the Video Stream* on Axis Support web at www.axis.com/techsup
Certificate error when using IEEE 802.1X	For authentication to work properly, the date and time settings in the Axis product should be synchronized with an NTP server. See *Date & Time, on page 47*.

The product is accessible locally but not externally

Router configuration	To configure your router to allow incoming data traffic to the Axis product, enable the NAT-traversal feature which will attempt to automatically configure the router to allow access to the Axis product, see *NAT traversal (port mapping) for IPv4, on page 50*. The router must support UPnP™.
Firewall protection	Check the Internet firewall with your network administrator.
Default routers required	Check if you need to configure the router settings from **System Options > Network > TCP/IP > Basic**.

Problems with streaming H.264

Problems with AXIS Media Control (*Internet Explorer only*)	To enable the updating of video images in Internet Explorer, set the browser to allow ActiveX controls. Also, make sure that AXIS Media Control is installed on your computer.
No H.264 displayed in the client	Check that the relevant H.264 connection methods and correct interface are enabled in the AMC Control Panel (streaming tab). See *AXIS Media Control (AMC), on page 17*. In the AMC Control Panel, select the H.264 tab and click **Set to default H.264 decoder**. Check that RTSP is enabled under **System Options > Network > TCP/IP > Advanced**.
Multicast H.264 only accessible by local clients	Check if your router supports multicasting, or if the router settings between the client and the product need to be configured. The TTL (Time To Live) value may need to be increased.
No multicast H.264 displayed in the client	Check with your network administrator that the multicast addresses used by the Axis product are valid for your network. Check with your network administrator to see if there is a firewall preventing viewing.
Installation of additional ActiveX component restricted or prohibited	Configure the Axis product to use a Java applet for updating video images in your browser. Go to **Setup > Live View Config** and select Java applet under **Default viewer**.
Poor rendering of H.264 images	Ensure that your graphics card is using the latest driver. The latest drivers can usually be downloaded from the manufacturer's website.
Color saturation is different in H.264 and Motion JPEG	Modify the settings for your graphics adapter. Refer to the adapter's documentation for more information.

Troubleshooting

Lower frame rate than expected	See *Performance Considerations, on page 65*.
	Reduce the number of applications running on the client computer.
	Limit the number of simultaneous viewers.
	Check with the network administrator that there is enough bandwidth available.
	Check in the AMC Control Panel (H.264 tag) that video processing is NOT set to **Decode only key frames**.
	Lower the image resolution.
	The maximum frames per second is dependent on the utility frequency (60/50 Hz) of the Axis product. See *Technical Specifications, on page 61*.

Status and Network indicator LEDs are flashing red rapidly

Hardware failure	Contact your Axis reseller.

Video and image problems, general

Image unsatisfactory	Check the video stream and camera settings under **Setup > Video & Audio > Video Stream** and **Setup > Video & Audio > Camera Settings**.

Motion Detection triggers unexpectedly

Changes in luminance	Motion detection is based on changes in luminance in the image. This means that if there are sudden changes in the lighting, motion detection may trigger mistakenly. Lower the sensitivity setting to avoid problems with luminance.

No audio

Incorrect setup	Check the sound card in the computer. Ensure that mute is not selected and that the volume settings are correct.
	Check that **Enable audio support** is selected under **Setup > System Options > Security > Audio Support**.
	Check that the correct **Audio Input** source is selected under **Setup > Video & Audio > Audio Settings**.

Poor audio quality

Stuttering	Reduce the number of listeners and viewers. Decrease image resolution and compression.
Unsynchronized audio and video using H.264	Synchronize the product's date and time settings with an NTP server. Go to **Setup > System Options > Date & Time**.
Distorted audio	Check that the correct **Audio Input** source is selected under **Setup > Video & Audio > Audio Settings**.
Feedback loops	Feedback loops might appear in full-duplex mode. Try moving the microphone or the speaker, or use half-duplex mode instead.

Storage and disk management problems

Video cannot be recorded	Check that the SD card is not write protected (that is, read only).
SD card cannot be mounted	Reformat the SD card and then click Mount.

Technical Specifications

Technical Specifications

Function/group	Item	Specifications
Camera	Model	AXIS P1354–E
	Image sensor	Progressive scan RGB CMOS 1/3"
	Lens	Varifocal f=2.8 – 8 mm, F1.0, DC-Iris, IR corrected, CS mount Horizontal angle of view: 80° – 34° Vertical angle of view: 59° – 26° Diagonal angle of view: 103° – 43° Focus range 0.3 m to infinity
	Day and night functionality	Automatically removable infrared-cut filter
	Minimum illumination	Color: 0.1 lux, F1.2 B/W: 0.02 lux, F1.2
	Shutter time	1/29500 s to 2 s
Video	Video compression	H.264 (MPEG-4 Part 10/AVC, Baseline and Main Profile) Motion JPEG
	Resolutions	1280x960* (1,2 MP) to 160x90 *1400x1050 (1,4 MP) scaled resolution available via VAPIX®
	Frame rate H.264	30 fps in 60Hz capture frequency, 25 fps in 50Hz capture frequency
	Frame rate Motion JPEG	30 fps in 60Hz capture frequency, 25 fps in 50Hz capture frequency
	Video streaming	Multi-stream H.264 and Motion JPEG H.264: 2 individually configured streams in 720p and full frame rate Motion JPEG: 2 individually configured streams in 720p and full frame rate 1 H.264 and 1 MJPEG streams in 720p and full frame rate More streams if identical or limited in frame rate or resolution Controllable frame rate and bandwidth VBR/CBR H.264
	Pan/Tilt/Zoom	Digital PTZ, preset positions, guard tour
	Image settings	Compression, color, brightness, sharpness, contrast, white balance, exposure control, exposure zones, backlight compensation, fine tuning of behavior at low light, dynamic contrast Rotation: 0°, 90°, 180°, 270° Mirroring of images Text and image overlay Privacy mask Corridor Format

Technical Specifications

Function/group	Item	Specifications
Audio	Audio streaming	Two-way, full duplex
	Audio compression	AAC LC 8 kHz 32 kbit/s, 16 kHz 64 kbit/s G.711 PCM 8 kHz 64 kbit/s G.726 ADPCM 8 kHz 32 kbit/s or 24 kbit/s Configurable bit rate
	Audio input	3.5 mm jack for mic/line in, max 80 mVpp for microphone/max 6.2 Vpp for line signal Impedance: Min 1 kΩ, Mic-Power activated; Min 4 kΩ line Tip: Signal/Bias Ring: Bias Sleeve: Ground Power to external electret microphone: 1.3 V – 2.6 V (DC) SNR: > 70dB
	Audio output	3.5 mm jack for line out. min 1.8 Vpp SNR: > 70dB
	Built-in microphone specification	Sensitivity: -36 dB ±2 dB (0 dB = 1 V/Pa, 1 kHz) Max input (SPL): 100 dB Plugging the audio input jack disables the internal microphone
Network	Security	Password protection, IP address filtering, HTTPS encryption*, IEEE 802.1X network access control*, digest authentication, user access log
	Supported protocols	IPv4/v6, HTTP, HTTPS*, SSL/TLS*, QoS Layer 3 DiffServ, FTP, CIFS/SMB, SMTP, Bonjour, UPnP™, SNMPv1/v2c/v3(MIB-II), DNS, DynDNS, NTP, RTSP, RTP, TCP, UDP, IGMP, RTCP, ICMP, DHCP, ARP, SOCKS *This product includes software developed by the Open SSL Project for use in the Open SSL Toolkit (www.openssl.org)
System Integration	Application Programming Interface	Open API for software integration, including the ONVIF specification available at www.onvif.org, as well as VAPIX® and AXIS Camera Application Platform from Axis Communications, specifications available at www.axis.com Support for AXIS Video Hosting System (AVHS) with One-Click Camera connection Support for AXIS Camera Companion (ACC)
	Intelligent video	Video motion detection, active tampering alarm, audio detection, Support for AXIS Camera Application Platform enabling installation of additional applications
	Triggers	Intelligent video, day/night mode, digital I/O, manual trigger, PTZ preset, PTZ moving, network lost, storage status, system initializing
	Actions	File upload via FTP, HTTP and email Notification via email, HTTP and TCP External output activation Video and audio recording to edge storage Pre- and post-alarm video buffering Day/Night switching Status LED activation Play audio clip
	Video access from web browser	Camera live view Video and audio recording to file (ASF) Customizable HTML pages Windows 7, Windows Vista, Windows XP, Windows Server 2008, Windows Server 2003 DirectX 9c or higher For other operating systems and browsers, see www.axis.com/techsup
	Management and maintenance	AXIS Camera Management tool on CD and web-based configuration Firmware upgrades over HTTP or FTP, firmware available on www.axis.com
	Installation aids	Focus assistant, pixel counter Remote back focus

Technical Specifications

Function/group	Item	Specifications
General	Casing	IP66- and NEMA 4X-rated, IK10 impact-resistant aluminum enclosure, Color: white NCS S 1002-B
	Processor, memory	ARTPEC-4, 256 MB RAM , 128 MB Flash Battery backed-up real-time clock
	Power	Power over Ethernet (PoE) IEEE 802.3af Class 3 or PoE+ IEEE 802.3at
	Connectors	RJ-45 10BASE-T/100BASE-TX PoE I/O (limited): 4-pin 2.50 mm terminal block, for 1 alarm input and 1 output RS-485/422, 2 pcs, 2 pos, full duplex, terminal block 3.5 mm jack for mic in (max 80 mVpp) or line mono input (max 6.2 mVpp) 3.5 mm jack for line mono output (max 2.8 Vpp) to active speaker DC-iris connector
	Edge storage	MicroSD/SDHC memory card slot (card not included) Support for recording to network share (Network Attached Storage or file server).
	Operating conditions	Temperature –40 °C to 50 °C (–40 °F to 122 °F) Humidity 10–100% RH (condensing)
	Approvals	EN 55022 Class B, EN 55024, EN/IEC/UL 60950-1, EN/IEC/UL 60950–22, EN 61000-6-1, EN 61000-6-2, EN 50121–4, IEC 62236–4 IEC 60529 IP66, NEMA 250 Type 4X, IEC 62262, IK10, IEC 60068–2–6, IEC 60068–2–27 FCC Part 15 Subpart B Class B ICES-003 Class B VCCI Class B C-tick AS/NZS CISPR 22 KN22 Class B, KN24
	Dimensions (HxWxD)	87/120 x 140/161 x 404 mm (3.4/4.7" x 5.5/6.4" x 15.9") including sunshield
	Weight	3.1 kg (6.8 lb.)
	Included accessories	Stand Wall mount bracket Sunshield Connector kit Installation Guide Installation and Management Software CD Windows decoder 1-user license Torx T20 screwdriver Allen key
	Video management software (not included)	AXIS Camera Companion (included) AXIS Camera Station and video management software from Axis' Application Development Partners (sold separately). For more information, see www.axis.com/products/video/software
	Optional accessories	AXIS T90A Illuminators AXIS T8414 Installation Display AXIS T8123 High PoE Midspan 1-Port Mounting accessories Lenses

Technical Specifications

Connectors

I/O terminal connector

4–pin terminal block for:

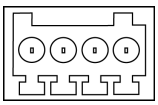

- Digital Input
- Digital Output
- Auxiliary power and ground (GND)

Function	Pin	Notes	Specifications
GND	1	Ground	
3.3 V DC Power	2	Can be used to power auxiliary equipment. Note: This pin can only be used as power out.	Max load = 50 mA
Digital Input	3	Connect to GND to activate, or leave floating (unconnected) to deactivate.	0 to +40 V DC
Digital Output	4	Internal connection to ground when activated, floating (unconnected) when deactivated. If used with an inductive load, e.g. a relay, a diode must be connected in parallel with the load, for protection against voltage transients.	Max load =100 mA Max voltage = +40 V DC

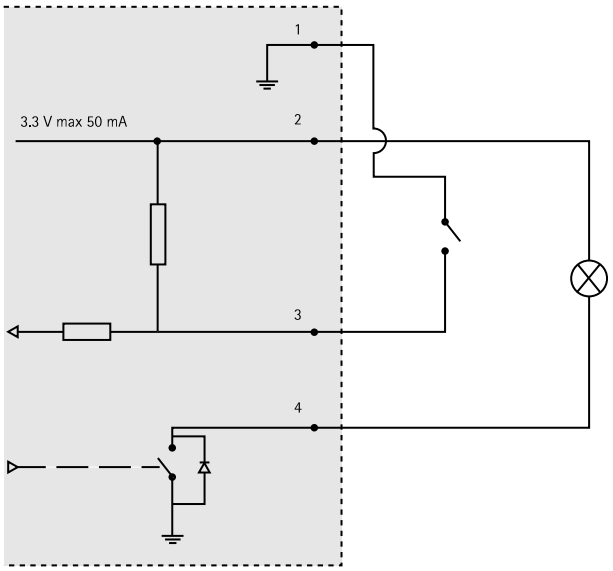

Power connector

2-pin terminal block for power input.

DC power input

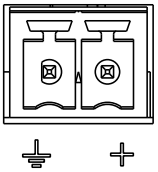

Technical Specifications

Audio connector

3.5 mm audio connectors

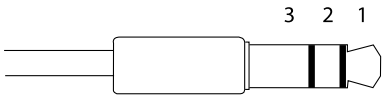

	Audio Input	Audio Output
1 Tip	Microphone/Line in	Line out (mono)
2 Ring		
3 Sleeve	Ground	Ground

RS-485/422 connector

Two 2-pin terminal blocks for RS-485/RS-422 serial interface. The serial port can be configured to support:

- Two-wire RS-485 half duplex
- Four-wire RS-485 full duplex
- Two-wire RS-422 simplex
- Four-wire RS-422 full duplex point to point communication

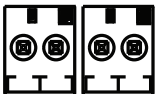

Function	Pin	Notes
RS-485/RS-422 TX (A)	1	TX pair for RS422 and 4–wire RS-485
RS-485/RS-422 TX (B)	2	
RS-485A alt RS-485/422 RX (A)	3	RX pair for all modes (combined RX/TX for 2–wire RS-485)
RS-485B alt RS-485/422 RX (B)	4	

Performance Considerations

When settings up your system, it is important to consider how various settings and situations will affect performance. Some factors affect the amount of bandwidth (the bit rate) required, others can affect the frame rate, and some affect both. If the load on the CPU reaches its maximum, this will also affect the frame rate.

The following factors are among the most important to consider:

- High image resolution and/or lower compression levels result in images containing more data. Bandwidth affected.
- Access by large numbers of Motion JPEG and/or unicast H.264 clients. Bandwidth affected.
- Simultaneous viewing of different streams (resolution, compression) by different clients. Effect on frame rate and bandwidth.
- Accessing Motion JPEG and H.264 video streams simultaneously. Frame rate and bandwidth affected.
- Heavy usage of event settings affect the product's CPU load. Frame rate affected.
- Heavy network utilization due to poor infrastructure. Bandwidth affected.
- Viewing on poorly performing client computers lowers perceived performance. Frame rate affected.

User Manual
AXIS P1354–E Network Camera
© Axis Communications AB, 2012
Ver. M1.11
Date: September 2012
Part No. 48263