GV-UBL2401 Series 2MP H.264 WDR Pro IR Ultra Bullet IP Camera

- 2 megapixel progressive scan CMOS
- Dual streams from H.264 and MJPEG
- Up to 30 fps at 1920 x 1080
- Intelligent IR
- Day and Night function (with removable IR-cut filter)
- Wide Dynamic Range Pro (WDR Pro)
- Defog
- Vandal resistance (IK10 for metal casing)
- Ingress protection (IP67)
- One alarm input and sensor output
- Built-in micro SD card slot (SD/SDHC) for local storage
- Motion detection
- Tampering alarm
- Visual automation
- Text overlay
- Privacy mask
- IP address filtering
- DC 5V / PoE
- Megapixel lens
- Supports iPhone, iPad, Android & 3GPP
- 31 languages on Web interface
- ONVIF (Profile S) conformant

* No memory card slot & local storage function for Argentina

Introduction

The Ultra Bullet Camera is a light-weighted cameras designed for outdoor environments. It adheres to the IP67 standard and has full protection against dust and jets of water. The camera is available in various focal lengths to best suit your needs.

Models

Model	Iris	Focal Length (mm)	Maximum Aperture	Image Format
GV-UBL2401-0F	Fixed	3	F/2.0	1/3''
GV-UBL2401-1F	Fixed	4	F/1.5	1/3''
GV-UBL2401-2F	Fixed	8	F/1.6	1/3''
GV-UBL2401-3F	Fixed	12	F/1.6	1/3''

Active Tampering Alarm

Tampered

Focus Change

Camera Shift

use IP
www.use-ip.co.uk
01304 827609

Overview

- **Dimensions**

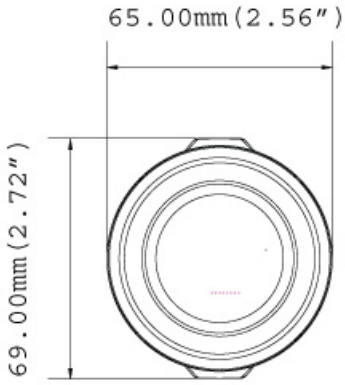

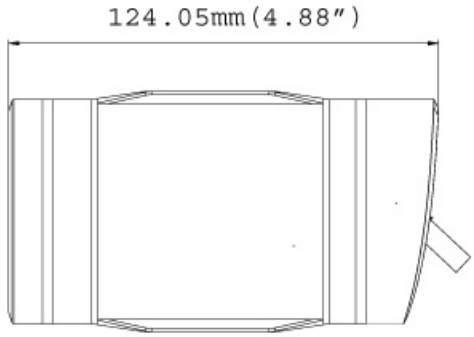

- **Panel**

- **LAN Connector**

Option 1 (Waterproof)

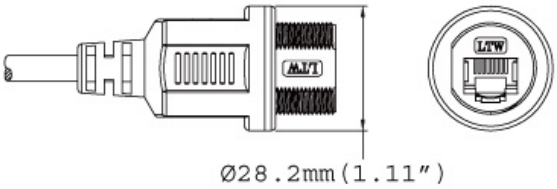

Option 2 (Smaller and non-waterproof)

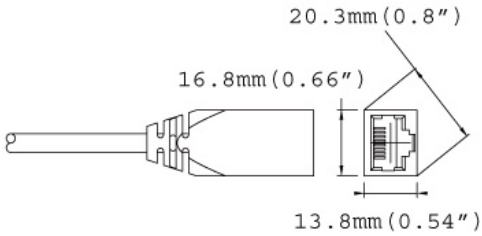

Specifications

Camera		GV-UBL2401-0F	GV-UBL2401-1F	GV-UBL2401-2F	GV-UBL2401-3F
Image Sensor		1/3.2” progressive scan CMOS ”			
Picture Elements		1920 (H) x 1080 (V)			
Minimum Illumination	Color	0.08 Lux			
	B/W	0.05 Lux			
	IR ON	0 Lux			
Shutter Speed		Automatic, Manual (1/5 ~ 1/8000 sec.)			
White Balance		Automatic, Manual (2800K ~ 8500K)			
Gain Control		Automatic			
S/N Ratio		47 dB			
BLC		Yes			
WDR Pro		Yes (with WDR sensor)			
Lens		**GV-UBL2401-0F**	**GV-UBL2401-1F**	**GV-UBL2401-2F**	**GV-UBL2401-3F**
Megapixel		Yes			
Focal Length		3 mm	4 mm	8mm	12 mm
Day/Night		Yes (with removable IR-cut filter)			
Lens Type		Fixed Lens			
Maximum Aperture		F/2.0	F/1.5	F/1.6	
Mount		M12			
Image Format		1/3”			
Operation	Focus	Fixed			
	Zoom	Fixed			
	Iris	Fixed			
IR LED Quantity		4 IR LEDs			
Max. IR Distance		10 m (32.81 ft.)			
Operation					
Video Compression		H.264, MJPEG			
Video Stream		Dual streams from H.264 and MJPEG			
Frame Rate		30 fps at 1920 x 1080 *The frame rate and the performance may vary depending on the number of connections and data bitrates (different scenes).			
Image Setting		Brightness, Contrast, Sharpness, Gamma, White Balance, Flicker-less, Image Orientation, Backlight Compensation, Zoom, Focus Change, Shutter Speed, D/N Sensitivity, WDR, Defog			
Two-way Audio		No			
Video Resolution					
Main Stream	4 : 3	1600 x 1200, 1280 x 960, 640 x 480, 320 x 240			
	16 : 9	1920 x 1080, 1280 x 720, 640 x 360, 448 x 252			
	5 : 4	1280 x 1024, 640 x 512, 320 x 256			
Sub Stream	4 : 3	640 x 480, 320 x 240			
	16 : 9	640 x 360, 448 x 252			
	5 : 4	640 x 512, 320 x 256			
Network					
Interface		10/100 Ethernet			
Protocol		HTTP, HTTPS, TCP, UDP, SMTP, FTP, DHCP, NTP, UPnP, DynDNS, 3GPP/ISMA, RTSP, PSIA, SNMP, QoS (DSCP), ONVIF (Profile S)			
Mechanical					
Temperature Detector		Yes			
Connectors	Power	2-pin terminal block, PoE			
	Ethernet	Ethernet (10/100 Base-T), RJ-45 cable Two types of models for selection: Waterproof or Non-Waterproof with smaller size			
	Digital I/O	I/O Wire			
	Local Storage	Micro SD card slot (SD/SDHC, SD version 2.0 only, Class 10) * **SDXC** and **UHS-I** card types are not supported.			
General					
Environment Temperature	Start-up	-20°C ~ 45°C (-4°F ~ 113°F)			
	Operation				
Humidity		10% to 90% (no condensation)			
Power Source		5V DC / PoE			
Max. Power Consumption		5.52 W			
Dimensions		124 x 65 x 69 mm (4.8” x 2.6” x 2.7”)			

Weight	730 g (1.6 lb)
Ingress Protection	IP67
Vandal Resistance	IK10 for metal casing
Regulatory	CE, FCC, C-Tick, RoHS compliant
Power over Ethernet	
PoE Standard	IEEE 802.3af Power over Ethernet / PD
PoE Power Supply Type	End-Span
PoE Power Output	Per Port 48V DC, 350mA. Max. 15.4 watts
Web Interface	
Installation Management	Web-based configuration
Maintenance	Firmware upgrade through Web Browser or Utility
Access from Web Browser	Camera Live View, Video Recording, Change Video Quality, Bandwidth Control, Image Snapshot, Digital I/O Control, Picture in Picture, Picture and Picture, Privacy Mask, Visual Automation, Tampering Alarm, Text Overlay, Digital PTZ
Language	Arabic / Bulgarian / Czech / Danish / Dutch / English / Finnish / French / German / Greek / Hebrew / Hungarian / Indonesian / Italian /Japanese / Lithuanian / Norwegian / Persian / Polish / Portuguese / Romanian / Russian / Serbian / Simplified Chinese / Slovakian / Slovenian / Spanish / Swedish / Thai / Traditional Chinese / Turkish
Application	
Network Storage	GV-NVR, GV-System, GV-Backup Center, GV-Recording Server
Smart Device Access	GV-Eye for Android smartphone, tablet, iPhone and iPod Touch GV-Eye HD for iPad
Live Viewing	IE, mobile phone
CMS Server support	GV-Control Center, GV-Center V2, GV-VSM

Note:
1. The signal range and data throughput may vary depending on the network conditions and environmental factors.
2. Specifications are subject to change without notice.

Packing List

1. Ultra Bullet Camera (with Waterproof or Non-Waterproof LAN connector)
2. Camera Stand x 1
3. Black Rubber x 1
4. Self Tapping Screw x 3
5. Plastic Screw Anchor x 3
6. Torx Wrench x 1
7. Sun-Shield Cover Kit (1 Sun-Shield Cover, 2 Philips Head Screws, 2 Plastic Screw Spacers and 2 Hexagon Screws included)
8. Cable connector (for waterproof LAN connector only)
9. Silica Gel Bag x 2
10. 2-Pin Terminal Block
11. Data cable
12. GV-IPCAM H.264 Quick Start Guide
13. GV-IPCAM H.264 Software CD
14. GV-NVR Quick Start Guide
15. GV-NVR Software DVD

Accessories

Name	Details
 GV-PA191 PoE Adapter	Weight: 130 g (0.29 lb) Dimensions (H x W x D): 43 x 69 x 40 mm (1.69” x 2.72” x 1.57”)
 GV-Relay V2	The GV-Relay V2 is designed to expand the voltage load of GV IP devices. It provides 4 relay outputs, and each can be set as normally open (NO) or normally closed (NC) independently as per your requirement.

Name	Details
Power Adapter	Power adapters are available in 4 regions: U.S.A., Australia, U.K and Europe.
GV-POE Switch	The GV-POE Switch is designed to provide power along with network connection for IP devices. The GV-POE Switch is available in various models with different numbers and types of ports.