E66A

1.3MP Indoor Dome with Basic WDR, SLLS, Vari-focal Lens

- 1.3 Megapixel with 720p
- Superior Low Light Sensitivity
- Vari-focal Lens with f2.8-12mm / F1.4
- Basic WDR (88 dB)
- 60 fps at 1280 x 720
- Vandal Resistant (IK09)

PHOTO INDICATION

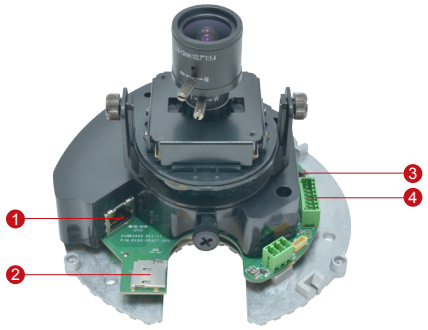

1. Ethernet Port
2. Memory Card Slot
3. Reset Button
4. Digital Input/Output and Audio-In / Audio-out

DIMENSION DIAGRAM

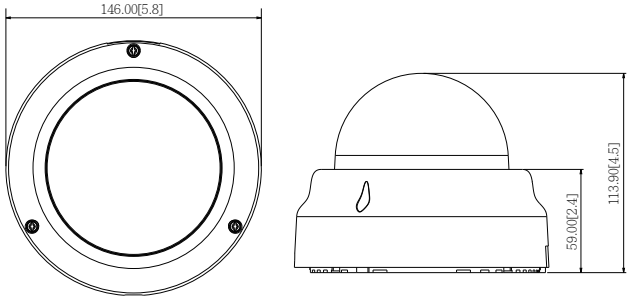

Unit: mm [inch]

ACCESSORY OPTIONS

Dome Cover		
PDCX-1101		4-inch, smoked, vandal proof (IK10)

Popular Mounting Solutions	
Surface	Accessories not required
Wall	PMAX-0308
Pendant	PMAX-0101 PMAX-0103
Corner	PMAX-0101 PMAX-0305 PMAX-0402
Pole	PMAX-0101 PMAX-0305 PMAX-0503
Flush	PMAX-1003
Gang Box	PMAX-0803

* For more mounting solutions, please refer to Project Planner on www.acti.com

use IP
www.use-ip.co.uk
01304 827609

E66A

PRODUCT SPECIFICATION

	E66A
• Device	
Device Type	Indoor Dome Camera
Image Sensor	Progressive Scan CMOS
Sensor Size	1/3"
Day / Night	No
Superior Low Light Sensitivity	No
Minimum Illumination	Color: 0.1 lux at F1.4 (30 IRE, 2400°K)
Mechanical IR Cut Filter	No
IR Sensitivity Range	No
IR LED	No
Electronic Shutter	1/5 ~ 1/2,000 sec (manual mode); 1/5 ~ 1/10,000 sec (auto mode)
• Lens	
Focal Length / Aperture	Vari-focal, f2.8 - 12 mm / F1.4
Iris	Fixed iris
Focus	Manual focus
Mount Type	Board mount
Horizontal Viewing Angle	83.0° - 31.1°
Viewing Angle Adjustment	Pan: 0° - 350°; Tilt: 17° - 163°; Rotate: 0° - 350°
• Video	
Compression	H.264 HP, MJPEG
Max. Frame Rate vs. Resolution	30 fps at 1280 x 960; 60 fps at 1280 x 720; 30 fps at 640 x 480; 15 fps at 320 x 240
Multi-Streaming	Simultaneous dual streams based on two configurations
Bit Rate	28 Kbps - 6 Mbps (per stream)
Bit Rate Mode	Constant, Variable
Image Enhancement	Basic WDR (88 dB); White balance: automatic, hold, and manual; Brightness; Contrast; Sharpness (auto); Auto gain control; Digital noise reduction; Flickerless
Privacy Mask	4 configurable regions
Text Overlay	User defined text on video
Image Orientation	Image flip and mirror
• Audio	
Compression	8 kHz, Mono, PCM, 16 bit encoding; G.711
Audio-In	Terminal block
Audio-Out	Terminal block
• Network	
Protocol & Service	TCP, UDP, HTTP, HTTPS, DHCP, PPPoE, RTP, RTSP, IPv6, DNS, DDNS, NTP, ICMP, ARP, IGMP, SMTP, FTP, UPnP, SNMP, Bonjour
Ethernet Port	1, Ethernet (10/100 Base-T), RJ-45 connector
Security	IP address filtering; HTTPs encryption; Password protected user levels; Anonymous login; IEEE802.1X network access control
• Alarm	
Alarm Trigger	Video motion detection (3 regions)
Alarm Response	Notify control center; Change camera settings; Command other devices; E-mail notification with snapshots; Save video or snapshot to local storage; Upload video, snapshot to FTP; Activate external device through digital output
• Interface	
Digital Input	1, Terminal block
Digital Output	1, Terminal block
Local Storage	MicroSDHC/MicroSDXC memory card slot (card not included)
• General	
Power Source / Consumption	PoE Class 2 (IEEE802.3af) / 4.37 W (IR on)
Weight	514 g (1.133 lb)
Dimensions (Ø x H)	146 mm x 114 mm (5.75" x 4.5")
Environmental Casing	Vandal Resistant (IK09 rated); Transparent dome cover
Mount Type	Surface, Pendant, Wall, Corner, Pole, Flush, Gang Box
Starting Temperature	-10°C ~ 50°C (14°F ~ 122°F)
Operating Temperature	-10°C ~ 50°C (14°F ~ 122°F)
Operating Humidity	10% ~ 85% RH
Approvals	CE (EN 55022 Class B, EN 55024), FCC (Part15 Subpart B Class B), IK09
• Integration	
Unified Solution	Fully compatible with ACTi software
ISV Integration	Software Development Kit (SDK) available; ONVIF compliant
Firmware Access Browser	Microsoft Internet Explorer 8.0 or newer (full functionality) Safari with QuickTime installed, and other browsers with VLC installed (partial functionality)

* All specifications are subject to change without notice.
* All brand names and registered trademarks are the property of their respective owners.