HIKVISION

use-IP
www.use-ip.co.uk
01304 827609

DS-2CD2142FWD-I (W)(S)
4MP WDR Fixed Dome Network Camera

- Up to 4 megapixel high resolution
- Dual stream
- 2.8mm/4mm/6mm fixed lens
- 120dB Wide Dynamic Range
- 3D Digital Noise Reduction
- 3-axis adjustment
- Support on-board storage, up to 128GB
- DC12V & PoE
- Support H.264+
- Up to 30m IR range
- IP67 weather-proof protection
- IK10
- -S: Audio/Alarm IO
- -W: Built-in Wi-Fi

Camera Accessories

Inclined ceiling mount

DS-1259ZJ

Wall mount

DS-1272ZJ-110

Wall mount + Junction Box

DS-1272ZJ-110B

Pendant mount

DS-1271ZJ-110B

Junction Box

DS-1280ZJ-DM18

Corner mount

DS-1276ZJ

Vertical Pole mount

DS-1275ZJ

Rain-proof Cap

DS-1250ZJ

DS-2CD2142FWD-I (W)(S)
4MP WDR Fixed Dome Network Camera

Specification

Camera	
Image Sensor	1/3" Progressive Scan CMOS
Min. Illumination	0.01Lux @ (F1.2, AGC ON) ,0 Lux with IR
Shutter Speed	1/3 s to 1/10,000 s
Lens	2.8mm, 4mm, 6mm @ F2.0 angle of view: 106°(2.8mm), 83°(4mm), 55.4°(6mm)
Lens Mount	M12
Day &Night	IR cut filter with auto switch
DNR	3D DNR
Wide Dynamic Range	120dB
P&T rotation	Pan: 0° ~ 355°, Tilt: 0° ~ 75°, Rotation: 0° ~ 355°
Compression Standard	
Video Compression	H.264 / MJPEG/H.264+
H.264 Type	Main Profile
Video Bit Rate	32 Kbps ~ 16 Mbps
Dual streams	Support
Image	
Max. Resolution	2688×1520
Max Frame Rate	50Hz: Main stream:20fps(2688×1520),25fps(1920×1080), 25fps(1280×720), Sub stream:25fps(352×288),25fps(640×360) 60Hz: Main stream:20fps(2688×1520),30fps(1920×1080),30fps(1280×720),Sub stream: 30fps(352×240),30fps(640×360)
Image Setting	Rotate Mode, Saturation, Brightness, Contrast, Sharpness adjustable by client software or web browser
BLC	Support, zone configurable
ROI Codec	Support
Network	
Network Storage	NAS (Support NFS,SMB/CIFS), ANR
Detection	Intrusion detection, Line crossing detection, Motion detection, Dynamic analysis
Alarm Trigger	Tampering alarm, Network disconnect, IP address conflict, Storage exception
Protocols	TCP/IP, UDP, ICMP, HTTP, HTTPS, FTP, DHCP, DNS, DDNS, RTP, RTSP, RTCP, PPPoE, NTP, UPnP, SMTP, SNMP, IGMP, 802.1X, QoS, IPv6, Bonjour
General Function	Anti-flicker, heartbeat, mirror, password protection, privacy mask, watermark, IP address filtering, Anonymous access
Standard	ONVIF (PROFILE S, PROFILE G), PSIA, CGI, ISAPI
Interface	
Communication Interface	1 RJ45 10M/100M Ethernet port
On-board storage	Built-in Micro SD/SDHC/SDXC slot, up to 128GB
Alarm interface	1x alarm I/O *only for –S models
Audio interface	1x audio I/O *only for –S models
Reset	Yes

DS-2CD2142FWD-I (W)(S) 4MP WDR Fixed Dome Network Camera

Wi-Fi * only for –W models	
Wireless Standards	IEEE802.11b, 802.11g, 802.11n
Frequency Range	2.4 GHz ~ 2.4835 GHz
Channel Bandwidth	20/40MHz Support
Protocols	802.11b: CCK, QPSK, BPSK, 802.11g/n: OFDM
Security	64/128-bit WEP, WPA/WPA2, WPA-PSK/WPA2-PSK, WPS
Transfer Rates	11b: 11Mbps, 11g: 54Mbps, 11n: up to 150Mbps
Wireless Range	50 meters *The performance varies based on actual environment.
General	
Operating Conditions	-30 °C – 60 °C (-22 °F – 140 °F), Humidity 95% or less (non-condensing)
Power Supply	DC12V ± 25%, PoE (802.3af Class3)
Power Consumption	Max. 5W
IR Range	Approx. 30 meters
Material	DS-2CD2142FWD-I, DS-2CD2142FWD-IS : Base&Top Cover: Metal
	DS-2CD2142FWD-IW, DS-2CD2142FWD-IWS: Base: Metal; Front Cover: Plastic
Ingress Protection	IP67
Impact Protection	IK10
Dimensions	Φ111 × 82 (4.4” × 3.2”)
Weight	500g (1.1lbs)

Order Models

DS-2CD2142FWD-I, DS-2CD2142FWD-IS, DS-2CD2142FWD-IW, DS-2CD2142FWD-IWS
-S: Audio/Alarm IO, -W: Built-in Wi-Fi
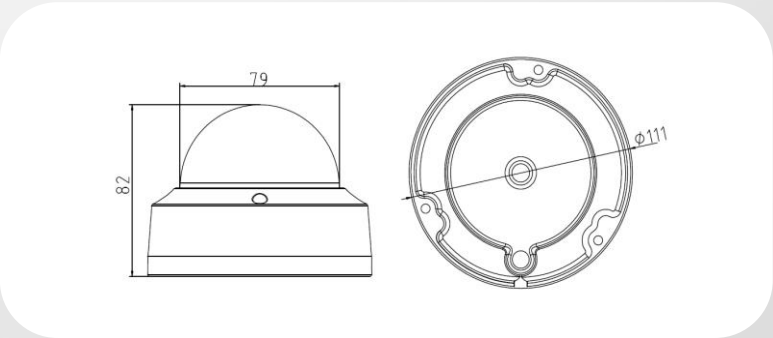
Dimensions