use-IP
www.use-ip.co.uk
01304 827609

HIKVISION

# DS-2CD2163G0-I(S)
# 6 MP IR Fixed Dome Network Camera

HD | SD | 3D DNR | WDR | H.265 | IP67

## Key Features

- 1/2.9" Progressive Scan CMOS
- 3072 × 2048@20 fps
- 2.8/4/6/8 mm fixed lens
- Color: 0.01 lux @(F1.2, AGC ON), 0.028 lux @(F2.0, AGC ON), 0 lux with IR
- H.265+, H.265, H.264+, H.264
- 2 Behavior analyses
- 120dB WDR
- BLC/3D DNR/ROI/HLC
- IP67
- Built-in micro SD/SDHC/SDXC card slot, up to 128 GB

# Specifications

| | |
|---|---|
| ***Camera*** | |
| Image Sensor | 1/2.9" Progressive Scan CMOS |
| Min. Illumination | Color: 0.01 lux @(F1.2, AGC ON), 0.028 lux @(F2.0, AGC ON), 0 lux with IR |
| Shutter Speed | 1/3 s to 1/100,000 s |
| Slow Shutter | Yes |
| Auto-Iris | No |
| Day & Night | IR Cut Filter |
| Digital Noise Reduction | 3D DNR |
| WDR | 120dB |
| 3-Axis Adjustment | Pan: 0° to 355°, tilt: 0° to 75°, rotate: 0° to 355° |
| ***Lens*** | |
| Focal Length | 2.8/4/6/8 mm |
| Aperture | F2.0 |
| Focus | Fixed |
| FOV | 2.8 mm, horizontal FOV: 97°, vertical FOV: 63°, diagonal FOV: 120°<br>4 mm, horizontal FOV: 78°, vertical FOV: 50°, diagonal FOV: 97°<br>6 mm, horizontal FOV: 60°, vertical FOV: 39°, diagonal FOV: 75°<br>8 mm, horizontal FOV: 39.5°, vertical FOV: 26°, diagonal FOV: 48° |
| Lens Mount | M12 |
| ***IR*** | |
| IR Range | Up to 30 m |
| Wavelength | 850nm |
| ***Compression Standard*** | |
| Video Compression | Main stream: H.265/H.264<br>Sub-stream: H.265/H.264/MJPEG<br>Third stream: H.265/H.264 |
| H.264 Type | Main Profile/High Profile |
| H.264+ | Main stream supports |
| H.265 Type | Main Profile |
| H.265+ | Main stream supports |
| Video Bit Rate | 256 Kbps to 16 Mbps |
| Audio Compression (-S) | G.711/G.722.1/G.726/MP2L2/PCM |
| Audio Bit Rate (-S) | 64Kbps(G.711)/16Kbps(G.722.1)/16Kbps(G.726)/32-192Kbps(MP2L2) |
| ***Smart Feature-set*** | |
| Behavior Analysis | Line crossing detection, intrusion detection |
| Face Detection | Yes |
| Region of Interest | Support 1 fixed region for main stream and sub-stream |
| ***Image*** | |
| Max. Resolution | 3072 × 2048 |
| Main Stream | 50Hz: 20 fps (3072 × 2048, 3072 × 1728, 2944 × 1656), 25 fps (2560 × 1440, 1920 × 1080, 1280 × 720)<br>60Hz: 20 fps (3072 × 2048, 3072 × 1728, 2944 × 1656), 30fps (2560 × 1440, 1920 × 1080, 1280 × 720) |
| Sub-Stream | 50Hz: 25fps (640 × 480, 640 × 360, 320 × 240)<br>60Hz: 30fps (640 × 480, 640 × 360, 320 × 240) |

| | |
|---|---|
| Third Stream | 50Hz: 25fps (1280 × 720, 640 × 360, 352 × 288)<br>60Hz: 30fps (1280 × 720, 640 × 360, 352 × 240) |
| Image Enhancement | BLC/3D DNR/HLC |
| Image Settings | Rotate mode, saturation, brightness, contrast, sharpness adjustable by client software or web browser |
| Target Cropping | No |
| Day/Night Switch | Day/Night/Auto/Schedule/Triggered by alarm input (-S) |
| ***Network*** | |
| Network Storage | Support Micro SD/SDHC/SDXC card (128G), local storage and NAS (NFS,SMB/CIFS), ANR |
| Alarm Trigger | Motion detection, video tampering, network disconnected, IP address conflict, illegal login, HDD full, HDD error |
| Protocols | TCP/IP, ICMP, HTTP, HTTPS, FTP, DHCP, DNS, DDNS, RTP, RTSP, RTCP, PPPoE, NTP, UPnP, SMTP, SNMP, IGMP, 802.1X, QoS, IPv6, Bonjour |
| General Function | One-key reset, anti-flicker, three streams, heartbeat, mirror, password protection, privacy mask, watermark, IP address filter |
| Firmware Version | V5.5.52 |
| API | ONVIF (PROFILE S, PROFILE G), ISAPI |
| Simultaneous Live View | Up to 6 channels |
| User/Host | Up to 32 users<br>3 levels: Administrator, Operator and User |
| Client | iVMS-4200, Hik-Connect, iVMS-5200, iVMS-4500 |
| Web Browser | IE8+, Chrome 31.0-44, Firefox 30.0-51, Safari 8.0+ |
| ***Interface*** | |
| Audio (-S) | 1 input (line in), 1 output (line out), mono sound |
| Alarm (-S) | 1 input, 1 output (max. 12 VDC, 30 mA) |
| Video Output | No |
| Communication Interface | 1 RJ45 10M/100M self-adaptive Ethernet port |
| On-board Storage | Built-in microSD/SDHC/SDXC slot, up to 128 GB |
| SVC | H.264 and H.265 encoding support |
| Reset Button | Yes |
| ***Audio*** | |
| Environment Noise Filtering | Yes |
| Audio Sampling Rate | 8 kHz/16 kHz/32 kHz/44.1 kHz/48 kHz |
| ***General*** | |
| Operating Conditions | -30 °C to +60 °C (-22 °F to +140 °F), Humidity 95% or less (non-condensing) |
| Power Supply | 12 VDC ± 25%, Φ 5.5mm coaxial power plug<br>PoE(802.3af, class 3) |
| Power Consumption and Current | 12 VDC, 0.6 A, max. 7.5W<br>PoE: (802.3af, 36V to 57V), 0.3 A to 0.2 A, max. 9W |
| Protection Level | IP67, IK10 |
| Material | Camera body: metal, bubble: plastic |
| Dimensions | Camera: Φ 111 mm × 82.4 mm (Φ 4.4" × 3.2")<br>Package: 134 × 134 × 108 mm (5.3" × 5.3" × 4.3") |
| Weight | Camera: approx. 500 g (1.1 lb.) |

## Available Models:

DS-2CD2163G0-I (2.8/4/6/8 mm), DS-2CD2163G0-IS (2.8/4/6/8 mm)

## Dimensions

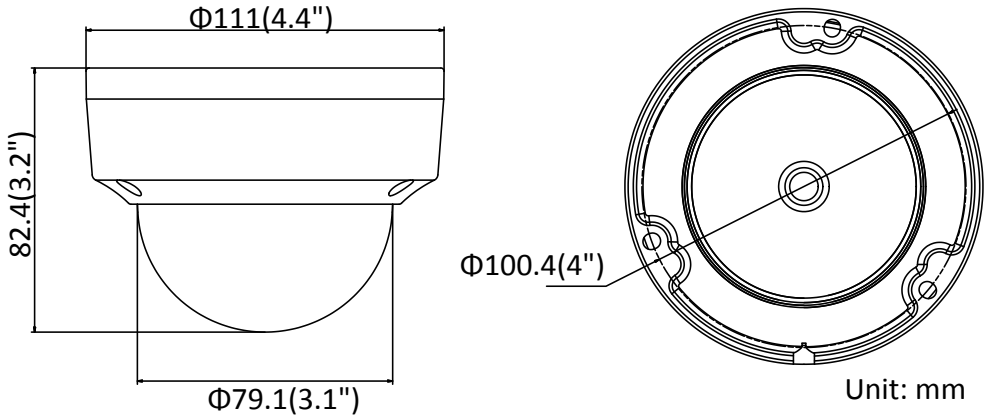


Unit: mm

## Accessories

Inclined ceiling mount

DS-1259ZJ

Wall mount

DS-1272ZJ-110

Wall mount + junction box

DS-1272ZJ-110B

Pendant mount

DS-1271ZJ-110

Junction box

DS-1280ZJ-DM18

Corner mount

DS-1276ZJ

Vertical pole mount

DS-1275ZJ

Rain-proof cap

DS-1250ZJ

Distributed by


**Headquarters**
No.555 Qianmo Road, Binjiang District,
Hangzhou 310051, China
T +86-571-8807-5998
overseasbusiness@hikvision.com

**Hikvision USA**
T +1-909-895-0400
sales.usa@hikvision.com

**Hikvision Europe**
T +31-23-55-42-770
info.eu@hikvision.com

**Hikvision Middle East**
T +971-4-8816086
salesme@hikvision.com

**Hikvision Russia**
T +7-495-669-67-99
saleru@hikvision.com

**Hikvision India**
T +91-22-28469900
sales@pramahikvision.com

**Hikvision Italy**
T +39-0438-6902
info.it@hikvision.com

**Hikvision France**
T +33(0)1-85-330-450
info.fr@hikvision.com

**Hikvision Spain**
T +34-91-737-16-55
info.es@hikvision.com

**Hikvision Poland**
T +48-22-460-01-50
poland@hikvision.com

**Hikvision UK**
T +01628-902140
support.uk@hikvision.com

**Hikvision Singapore**
T +65-6684-4718
sg@hikvision.com

**Hikvision Oceania**
T +61-2-8599-4233
salesau@hikvision.com

**Hikvision Canada**
T +1-909-895-0400
sales.usa@hikvision.com

**Hikvision Korea**
T +82-31-731-8841
sales.korea@hikvision.com

**Hikvision Brazil**
T +55 11 3318-0050
Latam.support@hikvision.com

**Hikvision Africa**
T +27 (10) 0351172
sale.africa@hikvision.com

**Hikvision Hong Kong**
T +852-2151-1761


© Hikvision Digital Technology Co., Ltd. 2017 | Data subject to change without notice | **05055220180619**