Technical Specifications

MOBOTIX S16B DualFlex

Flexible. Virtually Invisible Flush-Mount Dual-Lens Camera.
The S16B from MOBOTIX is a weatherproof system that stands out first and foremost for the extremely flexible installation options it offers. Two sensor modules are connected to the concealed camera housing via cables up to three meters long. This makes it possible to discreetly monitor two neighboring rooms with just a single camera.

- Mx6 system platform 2nd generation, with MxBus, H.264 and ONVIF compatibility
- Recording on an internal MicroSD card (4 GB as standard)
- Diverse installation options and mounting accessories for sensor modules
- Max. length of each sensor module cable: 3 m
- Microphone can be used in sensor module
- Additional microphone and speaker connections
- Integrated shock detector
- Weatherproof and robust camera housing (IP66, IK06)

use-IP
www.use-ip.co.uk
01304 827609

MOBOTIX

Technical Specifications: S16B DualFlex

Camera Variants	S16B DualFlex
Flexible and modular system: The S16B camera module (Body) Mx-S16B can be fitted with one or two sensor modules free of choice (day/night/thermal). MOBOTIX sensor cables are available with a length from 0.5 to 3 m (1.6 to 9.8 ft.). Additionally MOBOTIX offers three different S16B Complete Sets (Mx-S16B-S1, Mx-S16B-S2, Mx-S16B-S3) with one or two hemispheric sensor modules and 2 m (6.6 ft) long sensor cables.	
S16B Body	**Mx-S16B**
S16B Complete Set 1 (Body + 1x Mx-O-SMA-S-6D016 + accessories)	**Mx-S16B-S1**
S16B Complete Se 2 (Body + 2x Mx-O-SMA-S-6D016 + accessories)	**Mx-S16B-S2**
S16B Complete Set 3 (Body + 1x Mx-O-SMA-S-6D016 + 1x Mx-O-SMA-S-6N016 + accessories)	**Mx-S16B-S3**

Hardware	S16B DualFlex
Light sensitivity in lux at 1/60 s and 1/1 s	Day sensor (Color): 0.1/0.005 lux Night sensor (B/W): 0.02/0.001 lux
Thermal sensor modules	NETD typ. 50 mK, < 79 mK, IR range 7,5 to 13,5 µm
Temperature measuring range for thermal sensor modules	High Sensitivity: -40 to 160°C/-40 t0 320°F Low Sensitivity: -40 to 550°C/-40 to 1022°F
Optical image sensor (color or B/W sensor)	1/1.8“ CMOS, 6MP (3072 x 2048), Progressive Scan
Microprocessor	i.MX 6 Dual Core incl. GPU (1 GB RAM, 512 MB Flash)
H.264 Hardware Codec	Yes, bandwidth limitation available; output image format up to QXGA
Protection class S16B camera module (body)	IP66 and IK06
Protection class S16B with 6MP sensor mdoules	IP66 with all modules incl. Thermal; IK04 with B036 to B237; IK07 with B016; BlockFlexMount: IP30/no IK class
Intended use	Not for use in hazardous areas (Ex area)
Ambient temperature (range, incl. storage)	-40 to 60°C/-40 to 140°F (cold boot from -30°C/-22°F) BlockFlexMount: 0 to 50°C/32 to 122°F
Internal DVR, ex works	4 GB (microSD)
Microphone	Part of sensor module/BlockFlexMount (not part of sensor modules with CS-Mount or B500 super tele lens) or with accessory (e.g., ExtIO or AudioMount)
Technical data for external microphone	2,0 V, 2,2 kOhm, sensitivity –35 ± 4 dB, e. g., Panasonic Microphone Capsule WM61
Speaker	With accessory (e.g., SpeakerMount)
Technical data for external speaker	Max. power output 400 mW at 8 Ohm impedance, e. g., Visaton Speaker K36WP or K50WP
16bit/16kHz HD wideband audio (Opus codec)	Yes (live and audio messages)
Passive infrared sensor (PIR)	No
Temperature sensors/shock detector (tamper detection)	Yes/Yes
Power consumption (typically at 20°C/68°F)	7.5 Watts
Power consumption with one/two thermal sensor module(s) (typically at 20°C/68°F)	1.5 W per thermal sensor module, 2.5 W possible over the short term; can only be used together with an S16B body
PoE Class (IEEE 802.3af)	Class 2 or 3 (variable), factory setting: class 3; S16B with thermal sensor always requires class 3
Interfaces Ethernet 100BaseT/MxBus/USB	Yes (MxRJ45 and LSA+ rail)/Yes/Yes
Interfaces external microphone/speaker	Yes/Yes
Interface RS232	With accessory (MX-232-IO-Box)
Mounting options	Wall, ceiling, hidden insatllation; extensive selection of mounting accessories available
Dimensions Mx-S16B (height x width x depth)	130 x 115 x 33 mm
Weight Mx-S16B	430 g

Technical Specifications: S16B DualFlex

Hardware	S16B DualFlex
Housing Mx-S16B	PBT-30GF, color: white
Housing thermal sensor modules l (not PTMount)	Module housing: black anodized aluminum Pressure plate: V2A stainless steel Lens and protective glass lens: germanium
Standard accessory Mx-S16B	Screws, dowels, allen wrench, module key, cable strap, 0.5 m ethernet patch cable, Quick Install
Detailed technical documentation	www.mobotix.com > Support > Download Center
Online version of this document	www.mobotix.com > Support > Download Center
MTBF	> 80,000 hours
Certifications	EN55022:2010; EN55024:2010; EN50121-4:2006 EN61000-6-1:2007; EN 61000-6-2:2005 EN61000-6-3:2007+A1:2011 EN61000-6-4:2007+A1:2011 AS/ NZS CISPR22:2009+A1:2010 CFR47 FCC part15B
Protocols	IPv4, IPv6, HTTP, HTTPS, FTP, FTPS, RTP, RTSP, UDP, SNMP, SMTP, DHCP (client and server), NTP (client and server), SIP (client and server) G.711 (PCMA and PCMU) and G.722
Manufacturer‘s warranty (since May 2018)	3 years

Image Formats, Frame Rates, Image Storage	S16B DualFlex
Available video codecs	MxPEG/MJPEG/H.264
Image formats	Freely configurable format 4:3, 8:3, 16:9 or customized format (Image Cropping), such as 2592x1944 (5MP), 2048x1536 (QXGA), 1920x1080 (Full-HD), 1280x960 (MEGA)
Multistreaming	Yes
Multicast stream via RTSP	Yes
Max. image format optical sensor modules (dual image from both sensors)	2x 6MP (6144 x 2048)
Max. image format thermal sensor module	336 x 252 (Pixel Pitch 17 µm), scalable up to 3072 x 2048
Max. frame rate thermal sensor or thermal + optical sensor module	9 frames per secon (fps)
Max. frame rate optical sensor module (fps, only single core used)	**MxPEG:** 42@HD(1280x720), 34@Full-HD, 24@QXGA, 15@5MP, 12@6MP, 6@2x 6MP **MJPEG:** 26@HD(1280x720), 13@Full-HD, 9@QXGA, 5@5MP, 4@6MP, 2@2x 6MP **H.264:** 25@Full-HD, 20@QXGA
Number of images with 4 GB microSD (internal DVR)	CIF: 250,000, VGA: 125,000, HD: 40,000, QXGA: 20,000, 6MP: 10,000

General Functions	S16B DualFlex
Temperature measurement of 2x2 pixels in the center of the image (Thermal Spot)	Only with thermal sensor module (incl. TR)
TR temperature measurement in the whole image area	Only with thermal sensor module TR
Event trigger for temperatures above or below a limit between -40 to 550°C/-40 to 1022°F	Only with thermal sensor module (incl. TR)
Digital zoom and pan	Yes
ONVIF compatibility	Yes (Profile S, audio support with camera firmware V5.2.x and higher)
Genetec protocol integration	Yes
Programmable exposure zones	Yes
Snapshot recording (pre/post-alarm images)	Yes
Continuous recording with audio	Yes
Event recording with audio	Yes

Technical Specifications: S16B DualFlex

General Functions	S16B DualFlex
Time and event control/flexible event logic	Yes
Weekly schedules for recordings and actions	Yes
Event video and image transfer via FTP and email	Yes
Playback and QuadView via web browser	Yes
Bidirectional audio in browser	Yes
Animated logos on the image	Yes
Master/Slave functionality	Yes
Privacy zone scheduling	Yes
Customized voice messages	Yes
VoIP telephony (audio/video, alert)	Yes
Remote alarm notification (network message)	Yes
Programming interface (HTTP-API)	Yes
DVR/Storage Management	Inside camera via microSD card, externally via USB device and NAS, different streams for live image and recording, MxFFS with archive function, pre-alarm an post-alarm images, monitoring recording with failure reporting
Camera and data security	User and group management, SSL connections, IP-based access control, IEEE802.1x, intrusion detection, digital image signature
MxMessageSystem: Sending and receiving of MxMessages	Yes

Video Analysis	S16B DualFlex
Video motion detector	Yes
MxActivitySensor	Yes

Video Management Software	S16B DualFlex
MxManagementCenter	Yes
Mobile MOBOTIX App	Yes

Sensor Modules of the S16 (to Be Ordered Separately)

Overview: Available Sensor Modules For S16:

Sensor Modules and BlockFlexMounts Day, 6MP image sensor (color 3072 x 2048), IP66 (sensor modules) and IP30 (BlockFlexMounts)	
Sensor Module Day with Fisheye lens B016 (180° x 180°), white Sensor Module Day with Fisheye lens B016 (180° x 180°), black BlockFlexMount Day with Fisheye lens B016 (180° x 180°)	Mx-O-SMA-S-6D016 Mx-O-SMA-S-6D016-b Mx-O-SMA-B-6D016
Sensor Module Day with Ultra Wide lens B036 (103° x 77°), white Sensor Module Day with Ultra Wide lens B036 (103° x 77°), black BlockFlexMount Day with Ultra Wide lens B036 (103° x 77°)	Mx-O-SMA-S-6D036 Mx-O-SMA-S-6D036-b Mx-O-SMA-B-6D036
Sensor Module Day with Super Wide lens B041 (90° x 67°), white Sensor Module Day with Super Wide lens B041 (90° x 67°), black BlockFlexMount Day with Super Wide lens B041 (90° x 67°)	Mx-O-SMA-S-6D041 Mx-O-SMA-S-6D041-b Mx-O-SMA-B-6D041
Sensor Module Day with Wide lens B061 (60° x 45°), white Sensor Module Day with Wide lens B061 (60° x 45°), black BlockFlexMount Day with Wide lens B061 (60° x 45°)	Mx-O-SMA-S-6D061 Mx-O-SMA-S-6D061-b Mx-O-SMA-B-6D061
Sensor Module Day with Standard lens B079 (45° x 34°), white Sensor Module Day with Standard lens B079 (45° x 34°), black BlockFlexMount Day with Standard lens B079 (45° x 34°)	Mx-O-SMA-S-6D079 Mx-O-SMA-S-6D079-b Mx-O-SMA-B-6D079
Sensor Module Day with Tele lens B119 (31° x 23°), white Sensor Module Day with Tele lens B119 (31° x 23°), black BlockFlexMount Day with Tele lens B119 (31° x 23°)	Mx-O-SMA-S-6D119 Mx-O-SMA-S-6D119-b Mx-O-SMA-B-6D119
Sensor Module Day with Distant Tele lens B237 (15° x 11°), white Sensor Module Day with Distant Tele lens B237 (15° x 11°), black BlockFlexMount Day with Distant Tele lens B237 (15° x 11°)	Mx-O-SMA-S-6D237 Mx-O-SMA-S-6D237-b Mx-O-SMA-B-6D237
Sensor Module Day with Super-Tele lens B500 (8° x 6°), white Sensor Module Day with Super-Tele lens B500 (8° x 6°), black BlockFlexMount Day with Super-Tele lens B500 (8° x 6°)	Mx-O-SMA-S-6D500 Mx-O-SMA-S-6D500-b Mx-O-SMA-B-6D500
Sensor Module Day with CS-Mount (no lens), white Sensor Module Day with CS-Mount (no lens), black BlockFlexMount Day with CS-Mount (no lens)	Mx-O-SMA-S-6DCS Mx-O-SMA-S-6DCS-b Mx-O-SMA-B-6DCS
Sensor Module Day with CSVario-Objektiv B045-100-CS, white Sensor Module Day with CSVario-Objektiv B045-100-CS, black BlockFlexMount Day with CSVario-Objektiv B045-100-CS	Mx-O-SMA-S-6DCSV Mx-O-SMA-S-6DCSV-b Nur Selbstmontage
Sensor Modules and BlockFlexMounts Night, 6MP image sensor (B/W 3072 x 2048), IP66 (sensor modules) and IP30 (BlockFlexMounts)	
Sensor Module Night with Fisheye lens B016 (180° x 180°), white Sensor Module Night with Fisheye lens B016 (180° x 180°), black BlockFlexMount Night with Fisheye lens B016 (180° x 180°)	Mx-O-SMA-S-6N016 Mx-O-SMA-S-6N016-b Mx-O-SMA-B-6N016
Sensor Module Night with Ultra Wide lens B036 (103° x 77°), white Sensor Module Night with Ultra Wide lens B036 (103° x 77°), black BlockFlexMount Night with Ultra Wide lens B036 (103° x 77°)	Mx-O-SMA-S-6N036 Mx-O-SMA-S-6N036-b Mx-O-SMA-B-6N036

Sensor Modules and BlockFlexMounts Night, 6MP image sensor (B/W 3072 x 2048), IP66 (sensor modules) and IP30 (BlockFlexMounts)	
Sensor Module Night with Super Wide lens B041 (90° x 67°), white Sensor Module Night with Super Wide lens B041 (90° x 67°), black BlockFlexMount Night with Super Wide lens B041 (90° x 67°)	Mx-O-SMA-S-6N041 Mx-O-SMA-S-6N041-b Mx-O-SMA-B-6N041
Sensor Module Night with Wide lens B061 (60° x 45°), white Sensor Module Night with Wide lens B061 (60° x 45°), black BlockFlexMount Night with Wide lens B061 (60° x 45°)	Mx-O-SMA-S-6N061 Mx-O-SMA-S-6N061-b Mx-O-SMA-B-6N061
Sensor Module Night with Standard lens B079 (45° x 34°), white Sensor Module Night with Standard lens B079 (45° x 34°), black BlockFlexMount Night with Standard lens B079 (45° x 34°)	Mx-O-SMA-S-6N079 Mx-O-SMA-S-6N079-b Mx-O-SMA-B-6N079
Sensor Module Night with Tele lens B119 (31° x 23°), white Sensor Module Night with Tele lens B119 (31° x 23°), black BlockFlexMount Night with Tele lens B119 (31° x 23°)	Mx-O-SMA-S-6N119 Mx-O-SMA-S-6N119-b Mx-O-SMA-B-6N119
Sensor Module Night with Distant Tele lens B237 (15° x 11°), white Sensor Module Night with Distant Tele lens B237 (15° x 11°), black BlockFlexMount Night with Distant Tele lens B237 (15° x 11°)	Mx-O-SMA-S-6N237 Mx-O-SMA-S-6N237-b Mx-O-SMA-B-6N237
Sensor Module Night with Super-Tele lens B500 (8° x 6°), white Sensor Module Night with Super-Tele lens B500 (8° x 6°), black BlockFlexMount Night with Super-Tele lens B500 (8° x 6°)	Mx-O-SMA-S-6N500 Mx-O-SMA-S-6N500-b Mx-O-SMA-B-6N500
Sensor Module Night with CS-Mount (no lens), white Sensor Module Night with CS-Mount (no lens), black BlockFlexMount Night with CS-Mount (no lens)	Mx-O-SMA-S-6NCS Mx-O-SMA-S-6NCS-b Mx-O-SMA-B-6NCS
Sensor Module Night with CSVario-Objektiv B045-100-CS, white Sensor Module Night with CSVario-Objektiv B045-100-CS, black BlockFlexMount Night with CSVario-Objektiv B045-100-CS	Mx-O-SMA-S-6NCSV Mx-O-SMA-S-6NCSV-b Nur Selbstmontage
Sensor Modules and BlockFlexMounts Nigth with Longpass filter (LPF), 6MP image sensor (B7W: 3072 x 2048), IP66 (sensor modules) and IP30 (BlockFlexMounts)	
Sensor Module Night+LPF with Fisheye lens B016 (180° x 180°), white Sensor Module Night+LPF with Fisheye lens B016 (180° x 180°), black BlockFlexMount Night+LPF with Fisheye lens B016 (180° x 180°)	Mx-O-SMA-S-6L016 Mx-O-SMA-S-6L016-b Nicht verfügbar
Sensor Module Night+LPF with Ultra Wide lens B036 (103° x 77°), white Sensor Module Night+LPF with Ultra Wide lens B036 (103° x 77°), black BlockFlexMount Night+LPF with Ultra Wide lens B036 (103° x 77°)	Mx-O-SMA-S-6L036 Mx-O-SMA-S-6L036-b Mx-O-SMA-B-6L036
Sensor Module Night+LPF with Super Wide lens B041 (90° x 67°), white Sensor Module Night+LPF with Super Wide lens B041 (90° x 67°), black BlockFlexMount Night+LPF with Super Wide lens B041 (90° x 67°)	Mx-O-SMA-S-6L041 Mx-O-SMA-S-6L041-b Mx-O-SMA-B-6L041
Sensor Module Night+LPF with Wide lens B061 (60° x 45°), white Sensor Module Night+LPF with Wide lens B061 (60° x 45°), black BlockFlexMount Night+LPF with Wide lens B061 (60° x 45°)	Mx-O-SMA-S-6L061 Mx-O-SMA-S-6L061-b Mx-O-SMA-B-6L061
Sensor Module Night+LPF with Standard lens B079 (45° x 34°), white Sensor Module Night+LPF with Standard lens B079 (45° x 34°), black BlockFlexMount Night+LPF with Standard lens B079 (45° x 34°)	Mx-O-SMA-S-6L079 Mx-O-SMA-S-6L079-b Mx-O-SMA-B-6L079
Sensor Module Night+LPF with Tele lens B119 (31° x 23°), white Sensor Module Night+LPF with Tele lens B119 (31° x 23°), black BlockFlexMount Night+LPF with Tele lens B119 (31° x 23°)	Mx-O-SMA-S-6L119 Mx-O-SMA-S-6L119-b Mx-O-SMA-B-6L119
Sensor Module Night+LPF with Distant Tele lens B237 (15° x 11°), white Sensor Module Night+LPF with Distant Tele lens B237 (15° x 11°), black BlockFlexMount Night+LPF with Distant Tele lens B237 (15° x 11°)	Mx-O-SMA-S-6L237 Mx-O-SMA-S-6L237-b Mx-O-SMA-B-6L237
Sensor Module Night+LPF with Super-Tele lens B500 (8° x 6°), white Sensor Module Night+LPF with Super-Tele lens B500 (8° x 6°), black BlockFlexMount Night+LPF with Super-Tele lens B500 (8° x 6°)	Mx-O-SMA-S-6L500 Mx-O-SMA-S-6L500-b Mx-O-SMA-B-6L500
Sensor Module Night+LPF with CS-Mount (no lens), white Sensor Module Night+LPF with CS-Mount (no lens), black BlockFlexMount Night+LPF with CS-Mount (no lens)	Nicht verfügbar Nicht verfügbar Mx-O-SMA-B-6LCS
Sensor Modules Thermal, NETD 50 mK, measuring range -40 to 550 °C, IP66 (all)	
Thermal Sensor Module with metal housing, lens T079 (45° x 32°)	Mx-O-SMA-TS-T079
Thermal Sensor Module with metal housing, lens T119 (25° x 19°)	Mx-O-SMA-TS-T119

Sensor Modules Thermal, NETD 50 mK, measuring range -40 to 550 °C, IP66 (all)	
Thermal Sensor Module with metal housing, lens T237 (17° x 13°)	Mx-O-SMA-TS-T237
PTMount Thermal, lens T079 (45° x 32°), white	Mx-O-SMA-TP-T079
PTMount Thermal, lens T119 (25° x 19°), white	Mx-O-SMA-TP-T119
PTMount Thermal, lens T237 (17° x 13°), white	Mx-O-SMA-TP-T237
PTMount Thermal, lens T079 (45° x 32°), black	Mx-O-SMA-TP-T079-b
PTMount Thermal, lens T119 (25° x 19°), black	Mx-O-SMA-TP-T119-b
PTMount Thermal, lens T237 (17° x 13°), black	Mx-O-SMA-TP-T237-b
Sensor Modules Thermal with Thermal Radiometry (TR), NETD 50 mK, measuring range -40 to 550 °C, IP66 (all)	
Thermal Sensor Module TR with metal housing, lens R079 (45° x 32°)	Mx-O-SMA-TS-R079
Thermal Sensor Module TR with metal housing, lens R119 (25° x 19°)	Mx-O-SMA-TS-R119
Thermal Sensor Module TR with metal housing, lens R237 (17° x 13°)	Mx-O-SMA-TS-R237
PTMount Thermal TR, lens R079 (45° x 32°), white	Mx-O-SMA-TP-R079
PTMount Thermal TR, lens R119 (25° x 19°), white	Mx-O-SMA-TP-R119
PTMount Thermal TR, lens R237 (17° x 13°), white	Mx-O-SMA-TP-R237
PTMount Thermal TR, lens R079 (45° x 32°), black	Mx-O-SMA-TP-R079-b
PTMount Thermal TR, lens R119 (25° x 19°), black	Mx-O-SMA-TP-R119-b
PTMount Thermal TR, lens R237 (17° x 13°), black	Mx-O-SMA-TP-R237-b

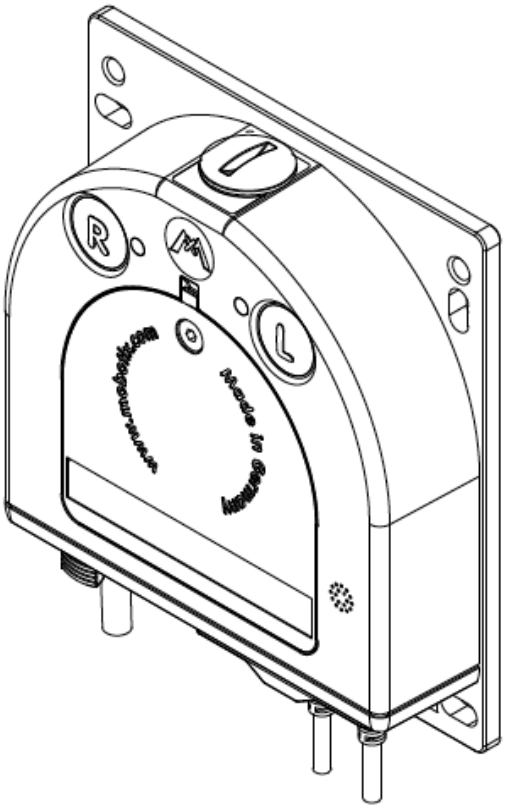

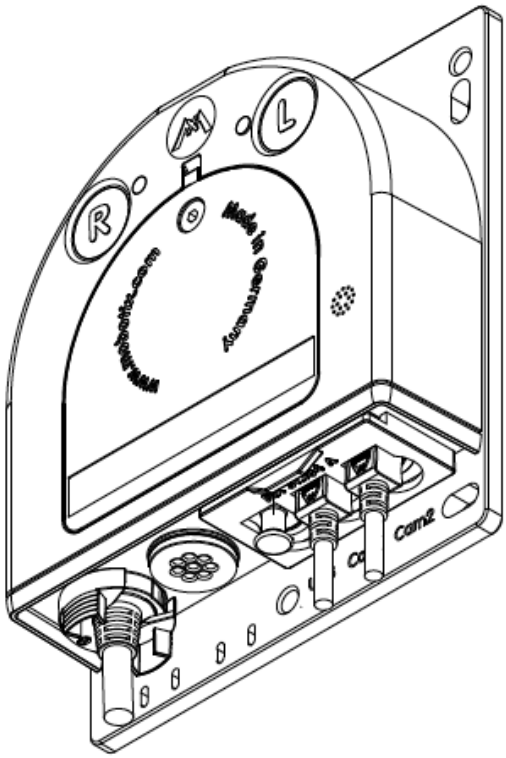

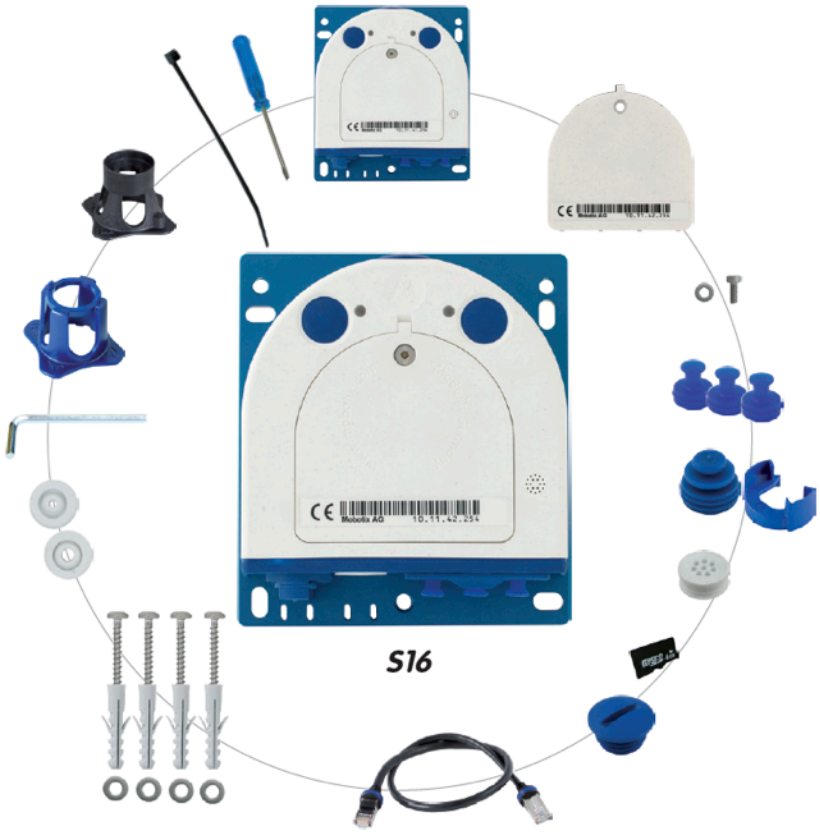

Standard Delivery Mx-S16B

S16 with two PTMount Thermal

Attention – Special Export Regulations For Thermal Cameras Apply!

Cameras with thermographic image sensors (“thermographic cameras”) are subject to special U.S. and ITAR (International Traffic in Arms Regulation) export regulations:

According to currently valid export regulations from the U.S. and ITAR, cameras with thermographic image sensors or their component parts cannot be exported to countries that have been embargoed by the U.S./ITAR. The corresponding delivery ban also applies to all individuals and institutions included on “The Denied Persons List” (see www.bis.doc.gov under Policy Guidance > Lists of Parties of Concern). These cameras and their installed thermographic image sensors are not to be used for the design, development, or production of nuclear, biological or chemical weapons or installed in these systems.

Link to the Thermal End User Statement on MOBOTIX Website

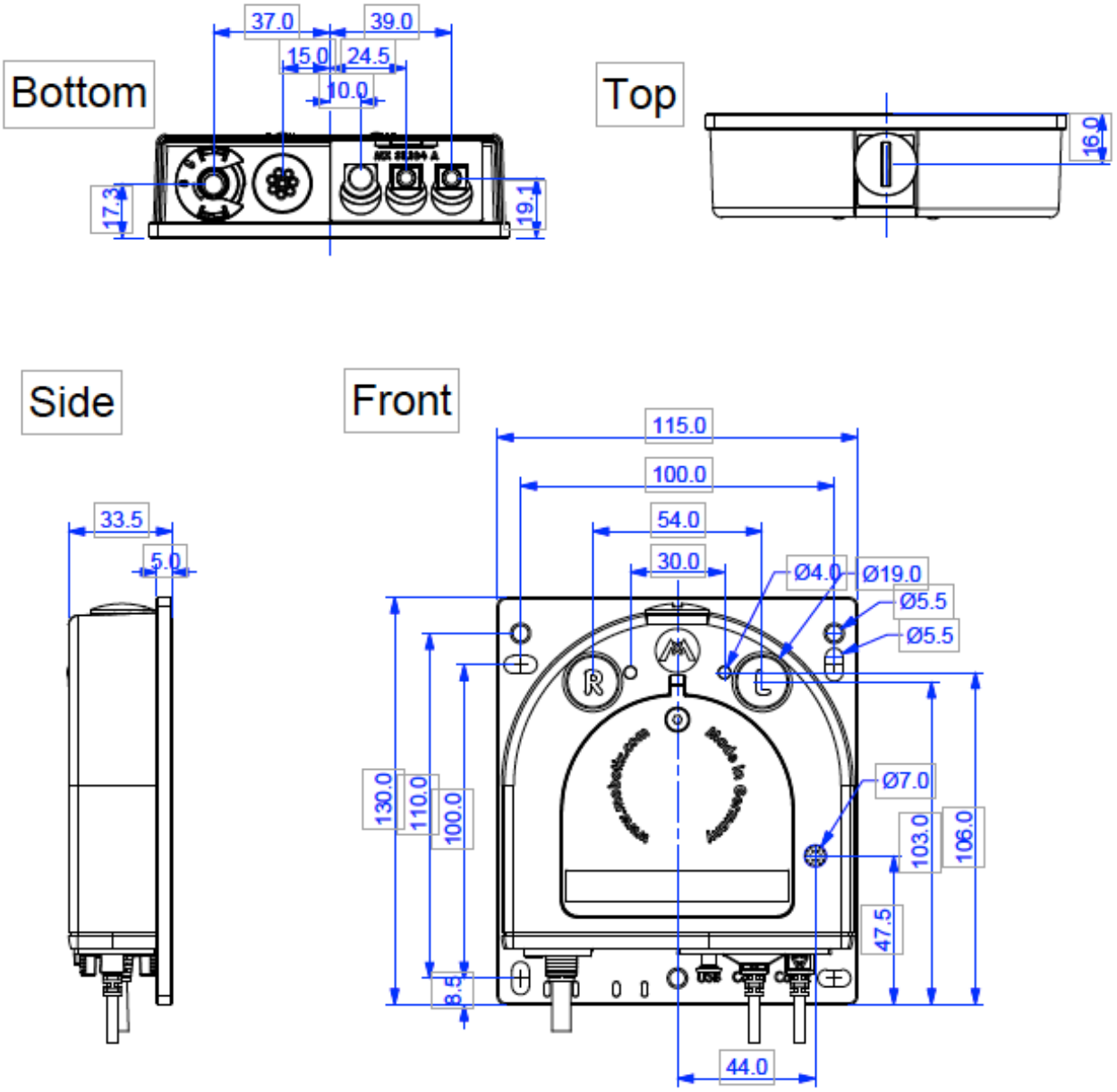

Dimension in mm