DS-2CD5185G0-IZS

8 MP Indoor VF Network Dome Camera

- 1/1.8" (2 MP) Progressive Scan CMOS
- 3840 x 2160 Resolution @ 30 fps
- Up to 100 ft (30 m) IR Range
- 2.8 to 12 mm Motorized Lens
- H.265+, H.265, H.264+, H.264
- 5 Defined Streams and 5 Custom Streams
- 120dB WDR
- Alarm/Audio Input/Output
- 12 VDC Accessory Output
- MicroSD Card Slot Supports 256 GB
- IK10 Protection
- Dome has Anti-Reflective Coating
- 12 VDC and PoE (802.3af)

The Hikvision DS-2CD5185G0-IZS Indoor VF Network Dome Camera provides high definition output. It supports H.265+ video compression, which assures savings in bandwidth and storage.

The camera is equipped with a 2.8 to 12 mm motorized vari-focal lens, and offers an EXIR 2.0 IR range of up to 100 ft (30 m).

Smart features, such as line crossing, intrusion, scene change detection, and face recognition are also supported.

Available models:
DS-2CD5185G0-IZS

Specifications

	DS-2CD5185G0-IZS
Camera	
Image Sensor	1/1.8" Progressive Scan CMOS
Minimum Illumination	Color: 0.009 Lux @ (f/1.2, AGC ON), 0 Lux with IR
Shutter Speed	1 s to 1/100,000 s
Slow Shutter	Yes
Day/Night	IR Cut Filter
Digital Noise Reduction	3D DNR
WDR	120 dB
Angle Adjustment	Pan: 0° to 355°, tilt: 0° to 75°, rotate: 0° to 355°
Lens	
Focal Length	2.8 to 12 mm
Aperture	f/1.2
Focus	Auto, semi-auto, manual
FOV	2.8 to 12 mm, horizontal FOV 112.4° to 41°, vertical FOV 58.0° to 23°, diagonal FOV 137° to 47°
Lens Mount	Integrated
IR	
IR Range	Up to 100 ft (30 m)
Wavelength	850 nm
Compression Standard	
Video Compression	Main stream: H.265+/H.265/H.264+/H.264; sub stream/third stream/fourth stream/fifth stream/custom stream: H.265+/H.265/H.264+/H.264/MJPEG
H.264 Type	Baseline profile/main profile/high profile
H.264+	Main stream
H.265 Type	Main profile
H.265+	Main stream
Video Bit Rate	32 Kbps to 16 Mbps
Audio Compression	G.711/G.722.1/G.726/MP2L2/PCM
Audio Bit Rate	64 Kbps (G.711)/16 Kbps (G.722.1)/16 Kbps (G.726)/32 to 192 Kbps (MP2L2)/32 Kbps (PCM)
Smart Features	
Behavior Analysis	Line crossing detection, intrusion detection, region entrance detection, region exiting detection, unattended baggage detection, object removal detection
Exception Detection	Scene change detection, audio exception detection, defocus detection
Statistics	Counting
Face Detection	Yes
Region of Interest	Four fixed regions for main stream, sub stream, third stream, fourth stream, fifth stream, and dynamic face tracking
Image	
Maximum Resolution	3840 x 2160
Main Stream	30 fps (3840 x 2160, 3200 x 1800, 2560 x 1440, 1920 x 1080, 1080 x 720)
Sub Stream	30 fps (704 × 480, 640 × 480)
Third Stream	30 fps (1920 × 1080, 1280 × 720, 704 × 480, 640 × 480)
Fourth Stream	30 fps (1920 × 1080, 1280 × 720, 704 × 480, 640 × 480)
Fifth Stream	30 fps (704 × 480, 640 × 480)
Custom Stream	30 fps (1920 × 1080, 1280 × 720, 704 × 480, 640 × 480); up to five custom streams are supported
Image Enhancement	BLC, HLC, 3D DNR, Defog, EIS
Image Setting	Rotate mode, saturation, brightness, contrast, sharpness, AGC, and white balance are adjustable by client software or web browser
Target Cropping	Yes
SVC	H.264 and H.265 encoding
Day/Night Switching	Day/night/auto/schedule/triggered by alarm in
Picture Overlay	Logo picture can be overlaid on video with 128 x 128 24 bit bmp format
Network	
Network Storage	MicroSD/SDHC/SDXC card (256 GB), local storage and NAS (NFS,SMB/CIFS), ANR
Alarm Trigger	Motion detection, video tampering alarm, network disconnected, IP address conflict, illegal login, HDD full, HDD error
Protocols	TCP/IP, ICMP, HTTP, HTTPS, FTP, DHCP, DNS, DDNS, RTP, RTSP, RTCP, PPPoE, NTP, UPnP, SMTP, SNMP, IGMP, 802.1X, QoS, IPv6, UDP, Bonjour
Security Measures	Password protection, HTTPS encryption, IEEE 802.1x port-based network access control, IP address filtering, basic and digest authentication for HTTP/HTTPS, WSSE, and digest authentication for ONVIF
General Function	One-key reset, anti-flicker, 5 streams and up to 5 custom streams, heartbeat, password protection, privacy mask, watermark, and IP address filtering
API	ONVIF (PROFILE S, PROFILE G), ISAPI, SDK
Simultaneous Live View	Up to 20 channels
User/Host	Up to 32 users. 3 user levels: administrator, operator and user
Client	iVMS-4200, Hik-Connect, Hik-Central
Web Browser	IE8+, Mozilla Firefox 30.0+, Google Chrome 31.0+, Safari 8.0+; plug-in free live view supported
Interface	
Audio	1-ch 3.5 mm input (line in), 1-ch 3.5 mm output, mono
Communication Interface	1-port RJ45 10M/100M/1000M Ethernet port; 1 RS-485 interface (half duplex, HIKVISION, Pelco-P, Pelco-D, self-adaptive)
Alarm	1-ch input, 1-ch output (up to 24 VDC 1A or 110 VAC 500 mA)
Video Output	1 Vp-p composite output (75 Ω/CVBS)
Power Output	12 VDC, maximum 200 mA
On-Board Storage	Built-in microSD/SDHC/SDXC slot, up to 256 GB
BNC	CVBS analog output (4CIF resolution), internal
Reset Button	Yes
Audio	
Environment Noise Filtering	Yes
Audio Sampling Rate	8 kHz/16 kHz/32 kHz/44.1 kHz/48 kHz
General	
Operating Conditions	-22° F to 140° F (-30° C to 60° C); humidity 95% or less (non-condensing)
Power Supply	12 VDC ± 20%, two-core terminal block; PoE (802.3at, class 4): 36 V to 57 V
Power Consumption and Current	12 VDC, 0.7 A, maximum 8 W; PoE (802.3at, 36 V to 57 V), 0.3 A to 0.2 A, maximum 9 W
Protection Level	IK10
Material	Aluminum alloy
Dimensions	Camera: Φ 5.5" x 4.8" (Φ 140.5 mm x 122.6 mm)
Weight	Camera: 1.98 lbs (0.9 kg)

© 2018 Hikvision USA Inc. • All Rights Reserved • Specifications subject to change without notice.
Hikvision USA Inc., 18639 Railroad Street, City of Industry, CA 91748, USA • Hikvision Canada, 4848 rue Levy, St-Laurent, Quebec, Canada, H4R 2P1
Tel: +1-909-895-0400 • Toll Free in USA: +1-866-200-6690 • E-Mail: sales.usa@hikvision.com • www.hikvision.com
Rev. 060418NA

Accessories

							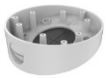
WML + PC130 Wall Mount Long + 130 mm Pendant Cap	**WML + PC130B** Wall Mount Long + 130 mm Pendant Cap (Black)	**CPM + PC130** Ceiling Pendant Mount + 130 mm Pendant Cap	**CPME** Extension Pipe	**PM** Pole Mount	**CM** Corner Mount	**RCM-1** Recessed Ceiling Mount	**AB135** Angled Base

Dimensions

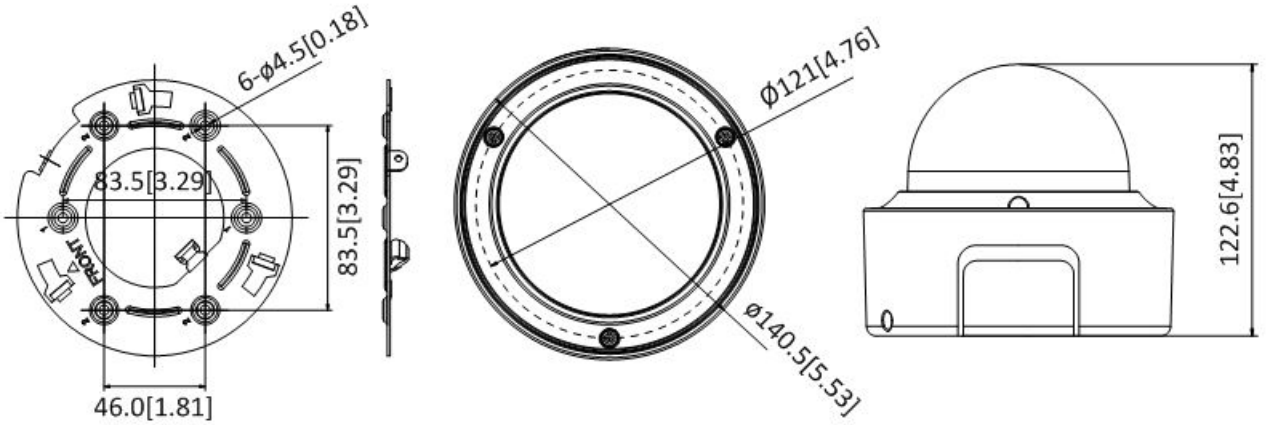

Unit: mm[inch]

© 2018 Hikvision USA Inc. • All Rights Reserved • Specifications subject to change without notice.
Hikvision USA Inc., 18639 Railroad Street, City of Industry, CA 91748, USA • Hikvision Canada, 4848 rue Levy, St-Laurent, Quebec, Canada, H4R 2P1
Tel: +1-909-895-0400 • Toll Free in USA: +1-866-200-6690 • E-Mail: sales.usa@hikvision.com • www.hikvision.com
Rev. 060418NA