GV-QSD5730 (33X) 5MP H.265 Low Lux WDR Pro IP Speed Dome

- 1/2.8" progressive scan low lux CMOS sensor
- Quad streams from H.265, H.264 or MJPEG
- Up to 30 fps at 2592 x 1944
- Min. illumination at 0.002 lux
- 33x optical zoom and 10x digital zoom
- Day and night function (with removable IR-cut filter)
- Four sensor inputs and two alarm outputs
- Wide Dynamic Range Pro (WDR Pro)
- Temperature tolerance (-25°C ~ 50°C / -13°F ~ 122°F)
- Support for TV-out
- Two-way audio
- Built-in SD card slot (SDHC/SDXC, Class 10) for local storage
- PoE+ (802.3at) / AC 24V
- Pan 360° endlessly
- Tilt from -10° to 100°
- Pan and tilt speed of up to 400°/sec and 300°/sec respectively
- PTZ movement (Preset, Cruise, Auto Pan, Sequence)
- PTZ auto tracking
- Electrical Image Stabilizer (EIS)
- Servo Feedback, returning the camera view to the previous position upon encountering external forces
- 3D noise reduction
- Privacy Mask
- 12 languages on Web interface
- ONVIF (Profile G, S, T) conformant

Introduction

The GV-IP Speed Dome (GV-QSD5730) is an indoor network PTZ camera that offers 33x optical zoom and 10x digital zoom, capable of showing smooth live view with great details. This camera can simultaneously deliver four video streams in resolutions up to 2592 x 1944 at 30 fps. The GV-QSD5730 supports H.265 video codec to achieve better compression ratio while maintaining high quality pictures at reduced network bandwidths.

Wide surveillance coverage is made possible with 360° endless panning and -10°~100° tilting capacity. PTZ functions such as Preset, Auto Pan, and Patrol can be programmed and activated by schedule. The GV-QSD5730 supports pan/tilt speeds ranging from a fast patrol of 400° and 300° per second to a slow ramble of 0.1° per second with 0.1° pan accuracy for fast and accurate tracking ability.

GV-QSD5730 also features Servo Feedback and Electronic Image Stabilizer (EIS) technology. The Servo Feedback technology ensures the camera view returns to the previous position when encountering external force (e.g. human interference) or environmental vibration. EIS technology can effectively produce stable images by actively sensing directional movement of the images and compensating accordingly; this is particularly useful for cameras installed at places where environmental movement (e.g. strong wind, the passing-by heavy vehicles) is constant, and when high optical zoom is executed.

Dimensions

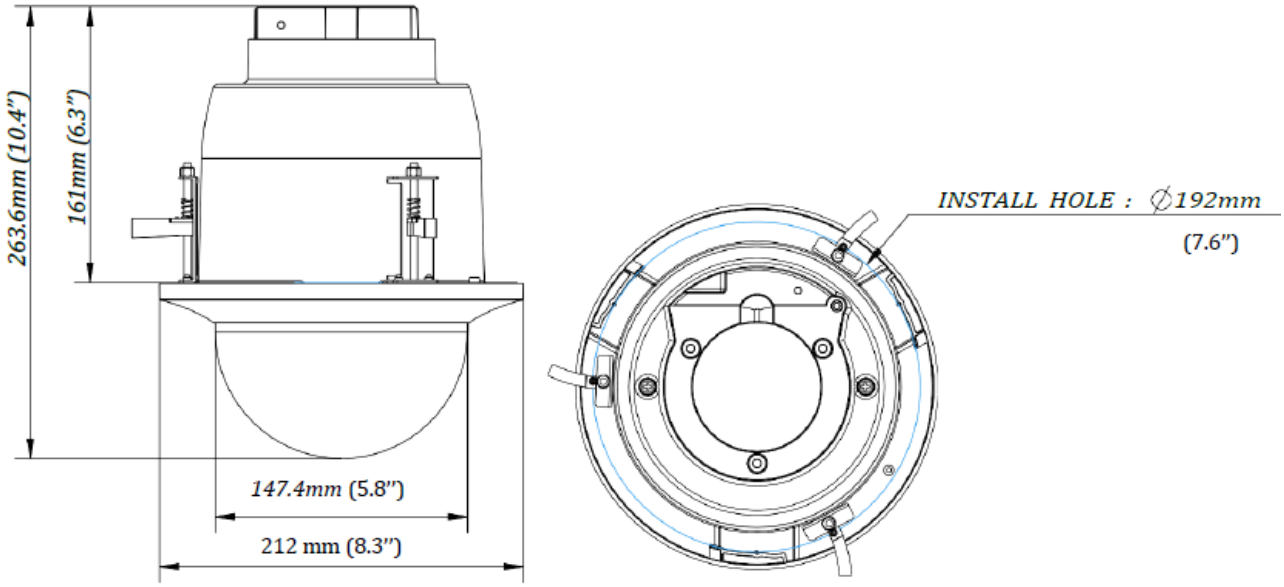

Specifications

Camera		
Image Sensor		1/2.8" progressive scan low lux CMOS
Optical Zoom		33x
Digital Zoom		10x
Picture Elements		2592 (H) x 1944 (V)
Minimum Illumination	Color	0.02 Lux
	B/W	0.002 Lux
Shutter Speed		Auto / Manual (1 ~ 1/10000 sec)
White Balance		Auto / Manual
Iris Control		Auto / Manual
WDR Pro		Yes
Optical Lens		
Megapixel		Yes
Day / Night		Yes (with removable IR-cut filter)
Focal Length		4.6 ~ 152 mm
Maximum Aperture		F/1.6
Horizontal FOV		55.4° ~ 1.9°
Operation	Focus	Auto / Manual
	Zoom	33x
	Iris	Auto / Manual
Video		
Video Compression		H.265, H.264, MJPEG
Video Streaming		Quad streams from H.265, H.264 or MJPEG
Video Resolution	Main Stream	2592 x 1944 (Default), 2560 x 1440, 1920 x 1080, 1280 x 1024, 1280 x 720, 800 x 600
	Sub Stream	1280 x 720, 1024 x 768, 800 x 600, 720 x 480, 640 x 480 (Default), 352 x 240, 320 x 240
	Third Stream (Closed by Default)	1280 x 720, 1024 x 768, 800 x 600, 720 x 480, 640 x 480, 352 x 240, 320 x 240
	Quad Stream (Closed by Default)	1280 x 720, 1024 x 768, 800 x 600, 720 x 480, 640 x 480, 352 x 240, 320 x 240
Frame Rate		30 fps at 2592 x 1944 (60/50 Hz) * The frame rate and performance may vary depending on the number of connections and data bitrates (different scenes).
Audio		
Audio Compression		G.711

Audio Support		Two-way Audio (external microphone and speaker required)
Network		
Interface		10/100 Ethernet
Protocol		ARP, PPPoE, IPv4/v6, ICMP, IGMP, QoS, TCP, UDP, DHCP, UPnP, SNMP, SMTP, RTP, RTSP, HTTP, HTTPS, FTP, NTP, DDNS, ONVIF (Profile G, S, T)
Security Feature		- No default password - 802.1x authentication - HTTPS with SSL certificate stored within the camera
Mechanical		
Connectors	Power	Terminal Block (AC 24V), PoE+ (802.3at)
	Ethernet	10/100 Base-T, RJ-45 connector
	Audio	1 in (Audio In Terminal Block); 1 out (Audio Out Terminal Block) *The Audio In port only supports microphones with power supply.
	Local Storage	SD card slot (SDHC / SDXC, Class 10)
	TV-Out	BNC connector: PAL (720 x 576 at 30 fps), NTSC (720 x 480 at 25 fps)
	Digital I/O	I/O Terminal Block
Operation		
Pan Travel		360° endless
Tilt Travel		-10° ~ 100°
Manual Speed	Pan	0.1° ~ 90°/s
	Tilt	0.1° ~ 55°/s
Preset Speed	Pan	400°/s
	Tilt	300°/s
Presets	Max. Number	256
	Accuracy	0.1°
Sequence	Max. Number	8
	Max. Presets Allowed	64
Auto Pan		4
Automatic Function		Preset, Sequence, Auto Pan, Cruise
Mechanical Flip		Yes
Digital Slow Shutter		On / Off
Motion Detection		On / Off
Wide Dynamic Range		On / Off
Day/Night: Mechanical IR Cut Filter		On / Off
Alarm	Digital I/O	4 Inputs, dry contact, NO / NC
		2 Relay Outputs (120mA 400V DC / 120mA 250V AC)
General		
Operating Temperature		-25°C ~ 50°C (-13°F ~ 122°F)
Humidity		10% ~ 90% (non-condensing)
Dimensions		Ø 212 x 263.6 mm (8.3” x 10.4”)
Weight		2.6 kg (5.73 lb)
Power Source		24V AC / PoE+ (802.3at)
Power Consumption		25.4 W
Regulatory		CE, FCC, RoHS compliant
Power over Ethernet		
PoE Standard		PoE+ IEEE802.3at (30W) / PD
PoE Power Supply Type		Mid-span
PoE Power Output		55V DC, 1.1A (60W Max.)
Web Interface		
Installation Management		Web-based configuration
Maintenance		Firmware upgrade through Web Browser or Utility
Language		Czech, English, French, German, Hungarian, Italian, Japanese, Portuguese, Russian, Spanish, Traditional Chinese, Simplified Chinese
Applications		
Software Supported		GV-VMS (V17.3.0 / V18.1.1), GV-DVR / NVR (V8.8), GV-Control Center (V3.7.0), GV-Recording Server / Video Gateway (V1.4.2), GV-Edge Recording Manager Win version (V1.4.0), GV-Redundant / Failover Server (V1.1.0.0) *It is required to apply patch files to all the supported software.

Smart Device Access	GV-Eye for iOS and Android
Live Viewing	Internet Explorer, Non-IE browser (Edge, Chrome, Firefox, Safari), Mobile App *The non-IE browsers only support displaying live view with MJPEG.

Note:

1. Do not use clothes or any ordinary material to clean the camera cover since they may result in scratches.
2. Mind the following when using an inserted memory card for recording:
   - Recorded data on the memory card can be damaged or lost if the data are accessed while the camera is under physical shock, power interruption, memory card detachment or when the memory card reaches the end of its lifespan. No guarantee is provided for such causes.
   - The stored data can be lost if the memory card is not accessed for a long period of time. Back up your data periodically if you seldom access the memory card.
   - Memory cards are expendable and their durability varies according to the conditions of the installed site and how they are used. Back up your data regularly and replace the memory card annually.
   - To avoid power outage, it is highly suggested to apply a battery backup (UPS).
   - For better performance, it is highly suggested to use SD card of MLC NAND flash, Class 10.
   - Replace the memory card when its read/write speed is lower than 6 MB/s or when the memory card is frequently undetected by the camera.
3. Specifications are subject to change without notice.

Packing List

1. GV- QSD5730
2. Drill Template Paster
3. 3-Pin Power Terminal Block (AC 24V)
4. 14-Pin Alarm/Audio I/O Terminal Block
5. Download Guide
6. Warranty Card

Note: Power adapters can be purchased upon request.

Accessories

Model No.	Details
GV-PoE Switch	GV-PoE Switch is designed to provide power along with network connection for IP devices. The GV-PoE Switch is available in various models with different numbers and types of ports.
GV-PoE Adapter	GV-PoE Adapter is designed to provide power to the IP device through a single Ethernet cable. Adopting the PoE adapter enables you to mount an IP device anywhere in a building where power outlets are not available.
Power Adapter	Contact our sales representatives for the countries and areas supported.