Network Speed Dome

Quick Start Guide

1.

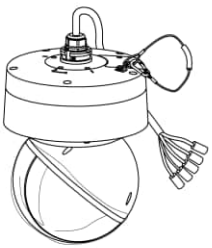

2.

3.

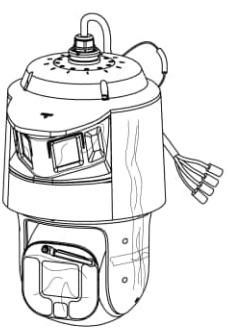

4.

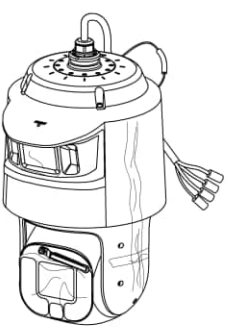

5.

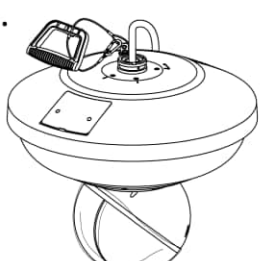

6.

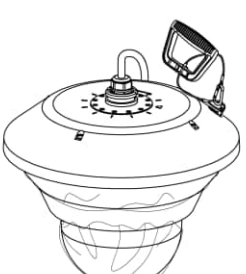

7.

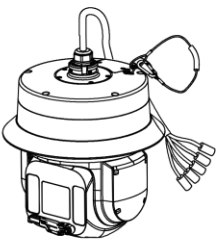

8.

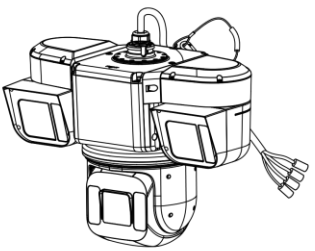

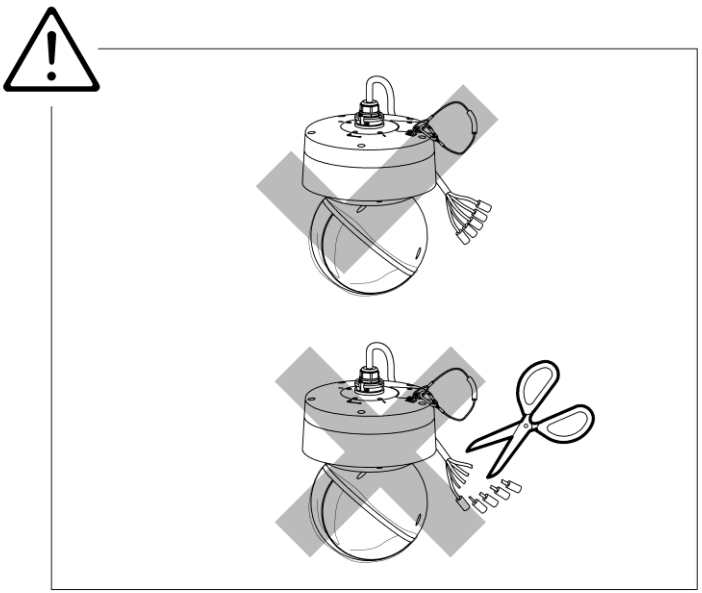

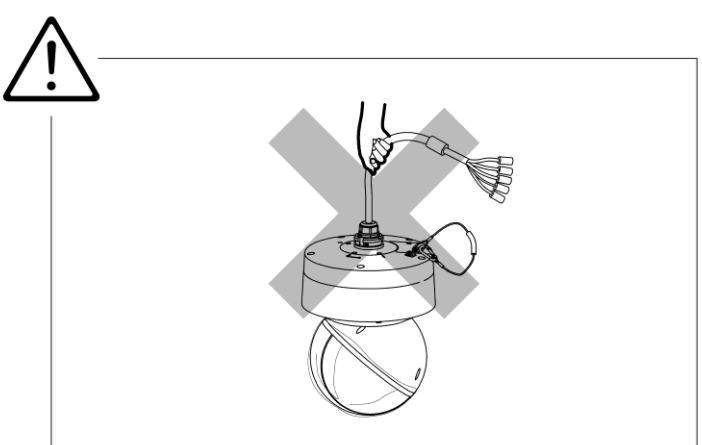

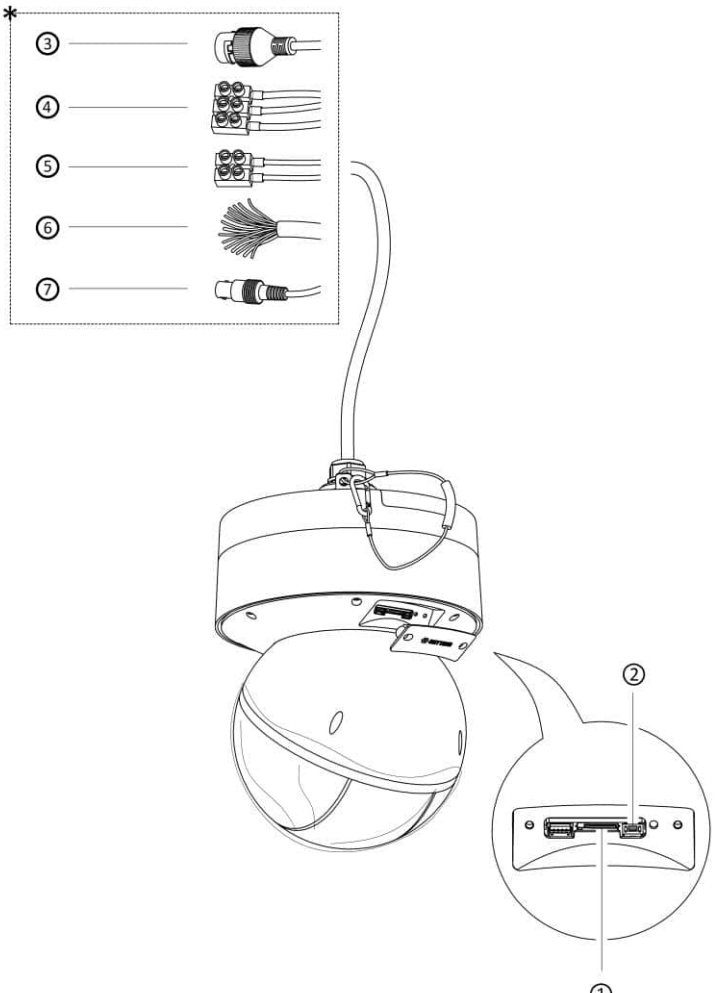
*
③
④
⑤
⑥
⑦
②
①

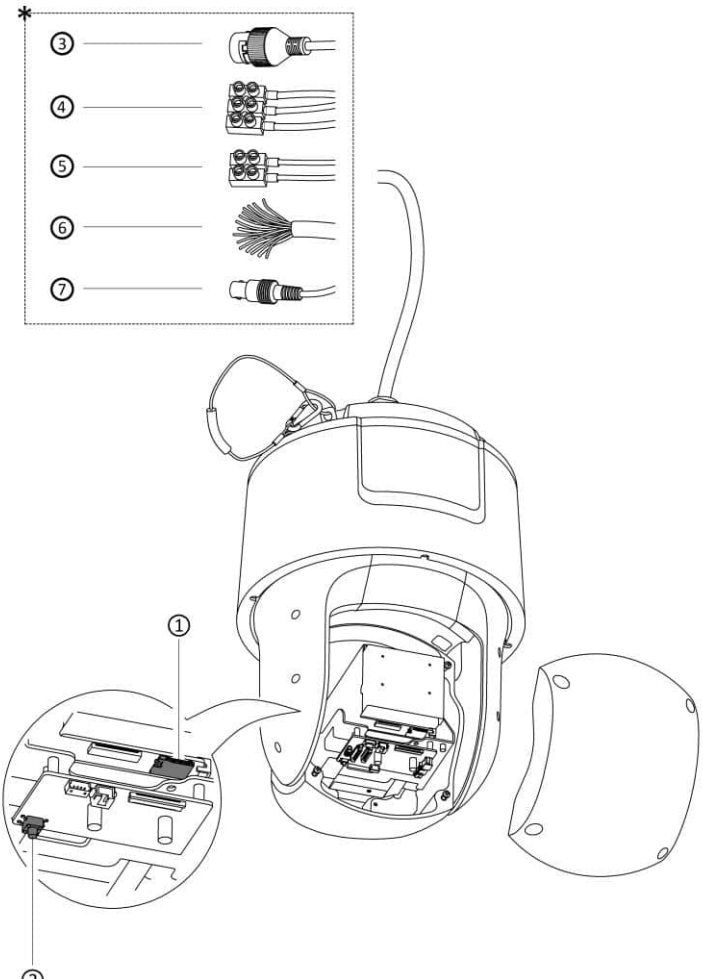
*
③
④
⑤
⑥
⑦
①
②

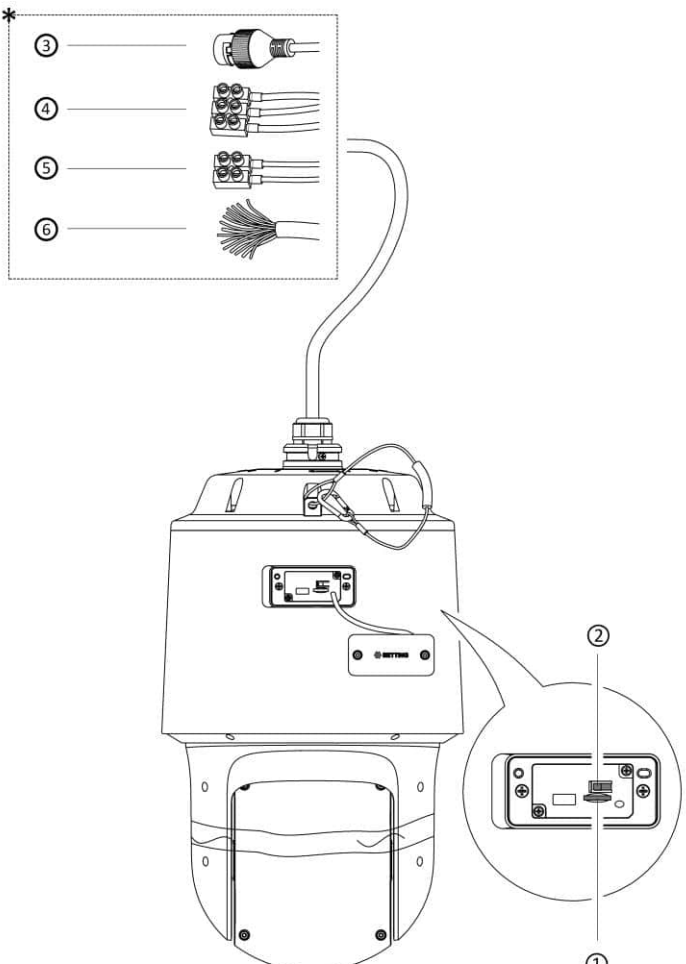
*
③
④
⑤
⑥
②
①

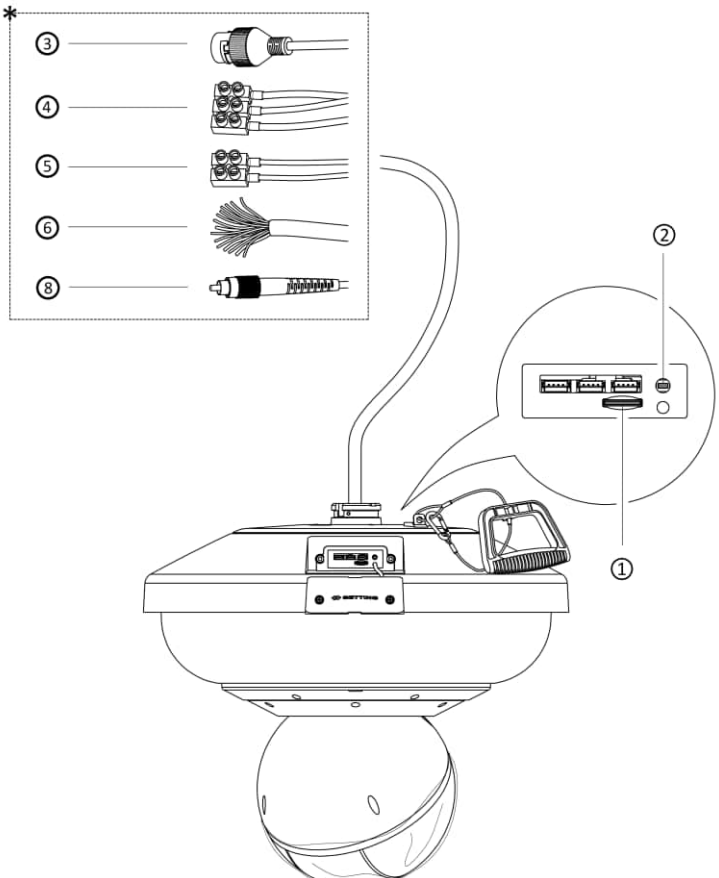
*
③
④
⑤
⑥
⑧
②
①

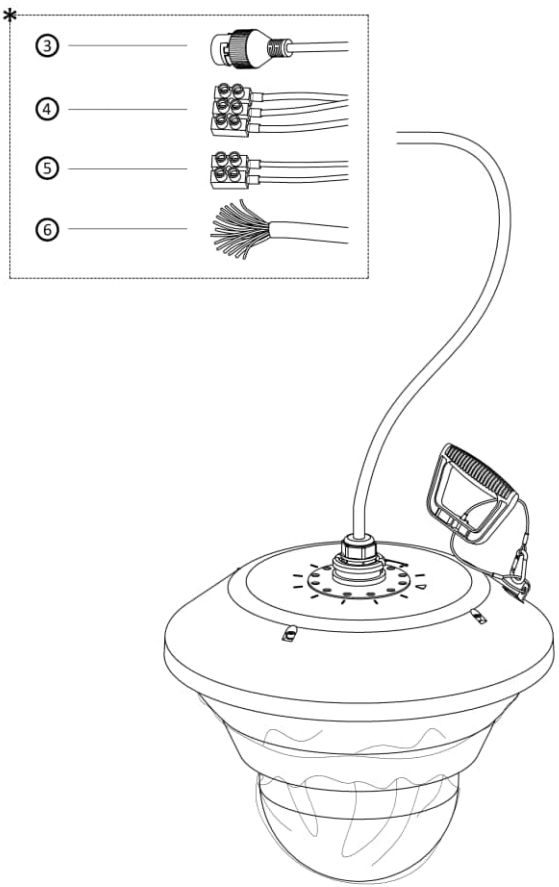
*
3
4
5
6

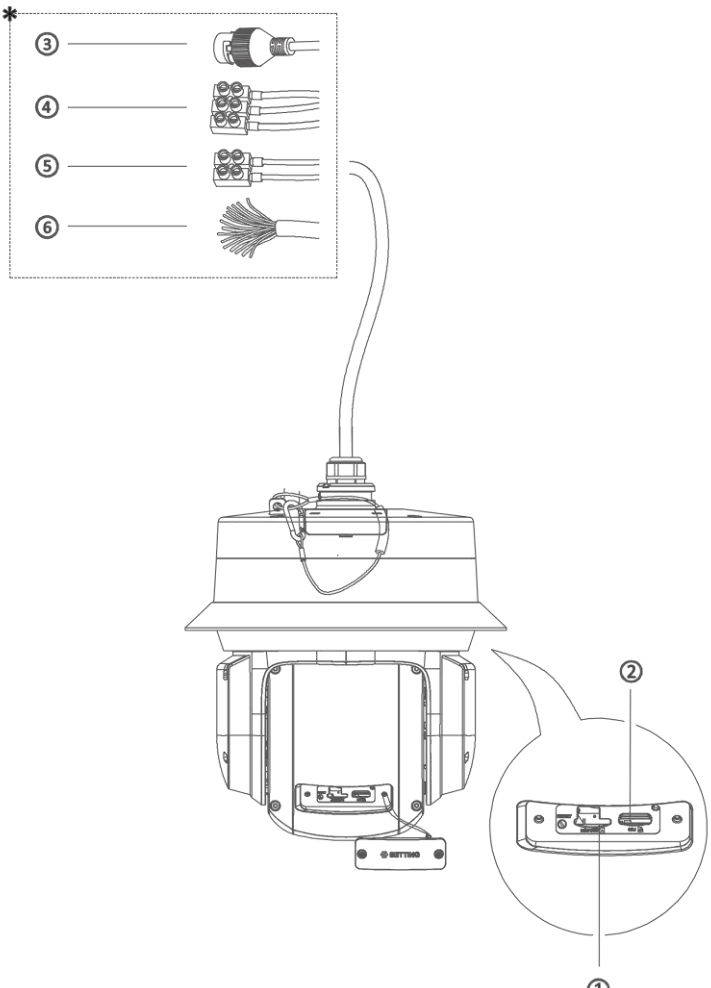
*
③
④
⑤
⑥
②
①

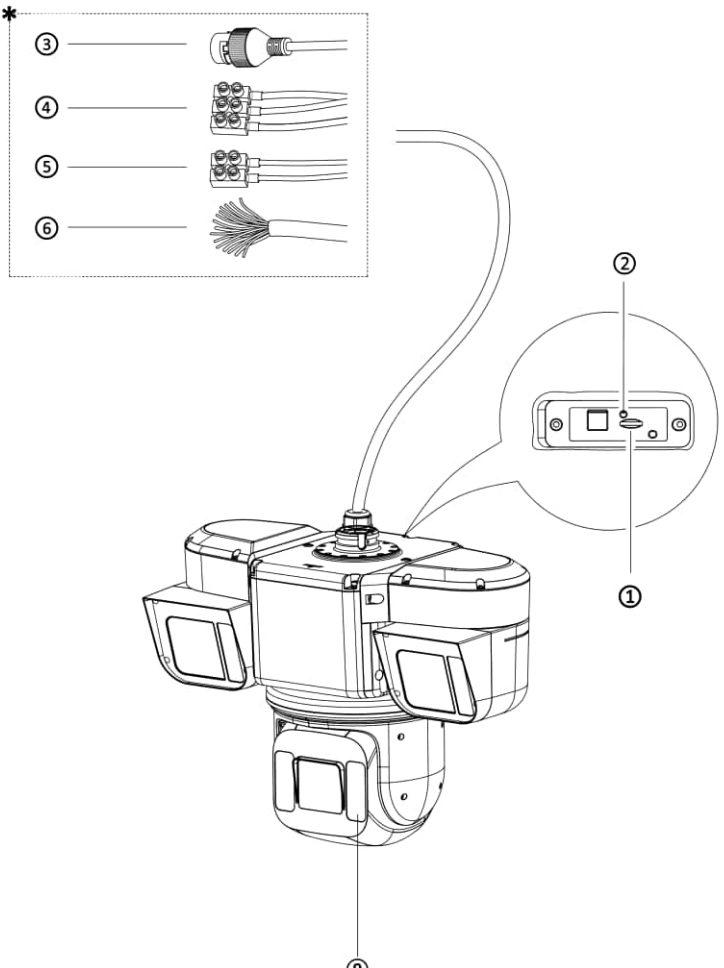
*
③
④
⑤
⑥
②
①
⑨

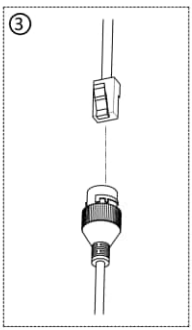
③

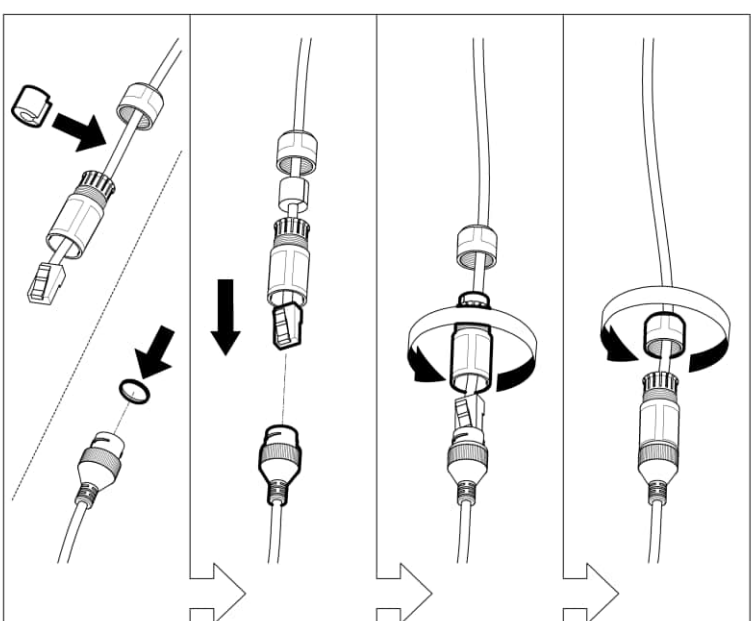

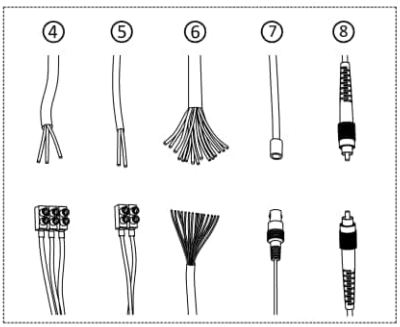
④
⑤
⑥
⑦
⑧

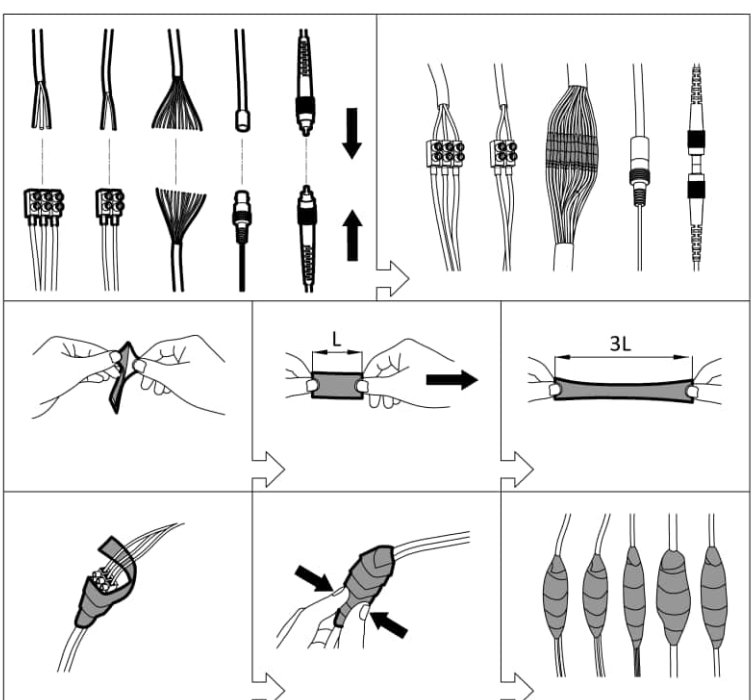
L
3L

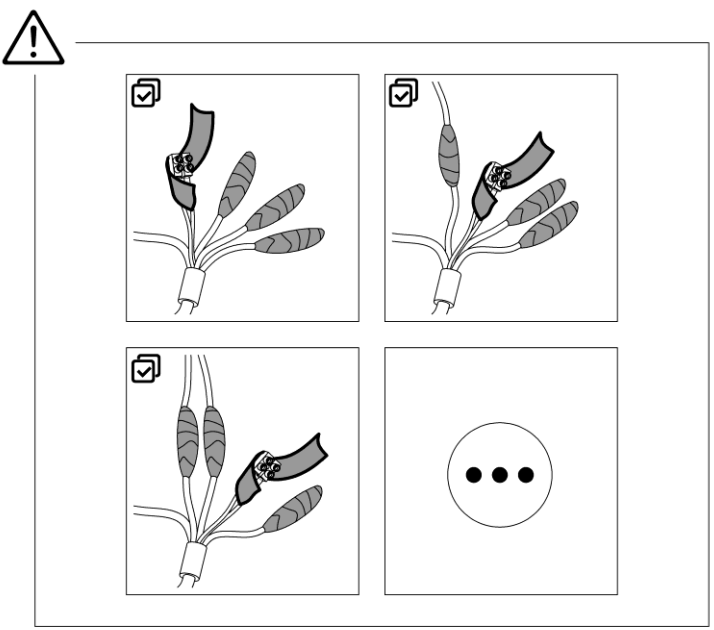

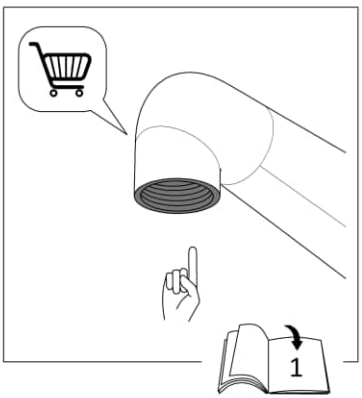

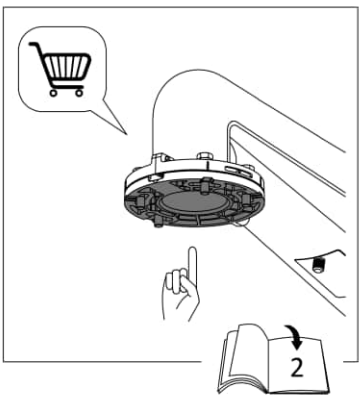

1

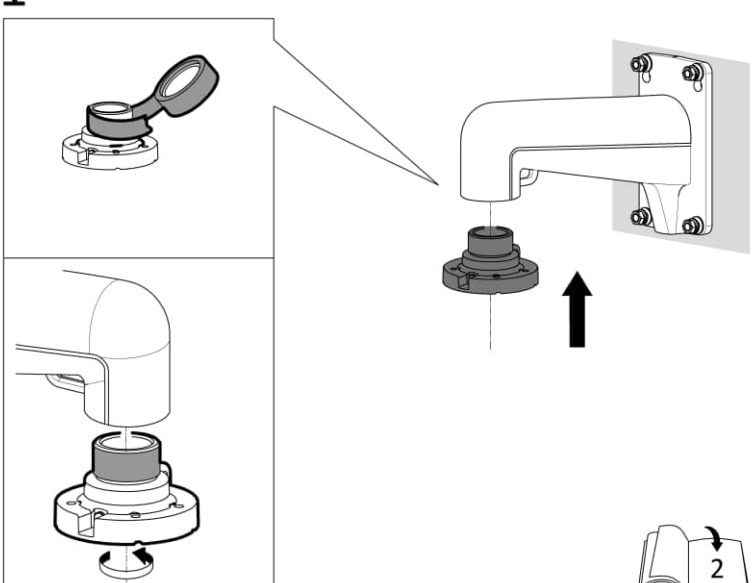

2

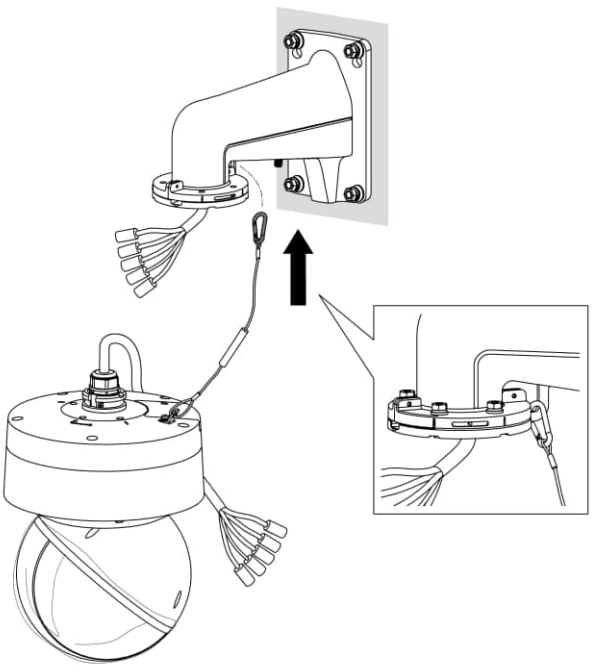

3

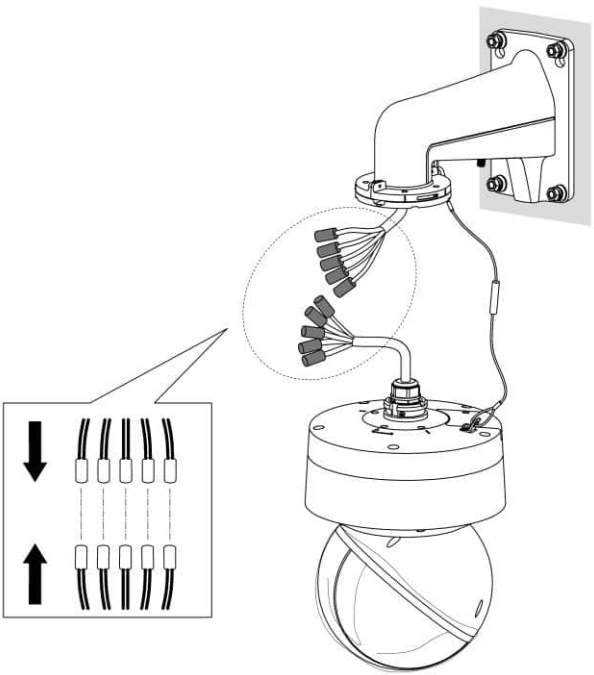

4

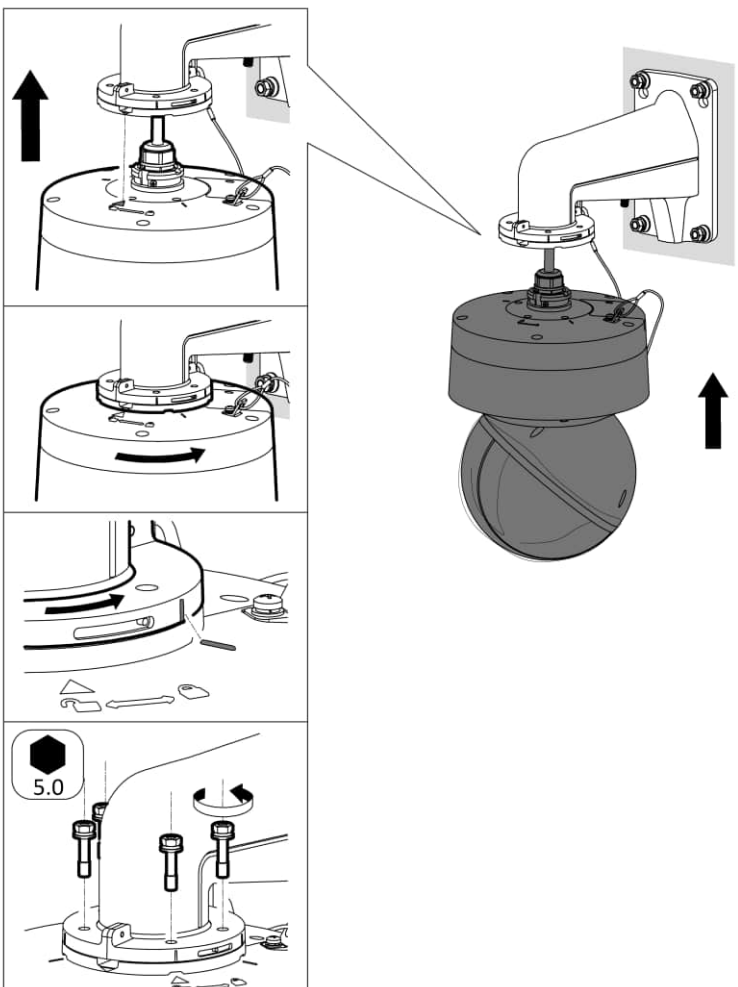

5

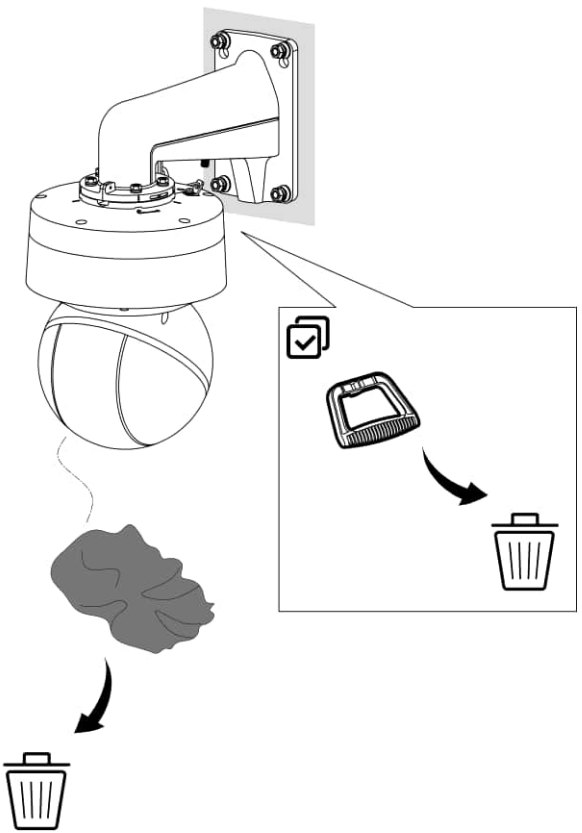

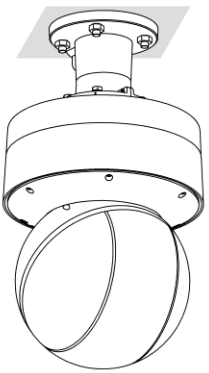

Read this manual before using the product.
Product appearance is for reference only and may differ from the actual product.

Interface

① Memory card slot
② Reset
③ Network interface
④ Power interface
⑤ RS-485 interface
⑥ Audio & Alarm interface
⑦ BNC interface
⑧ Fiber optical interface
⑨ Laser

Note: The interface varies with the models. Please refer to the product datasheet for details.

Alarm Output

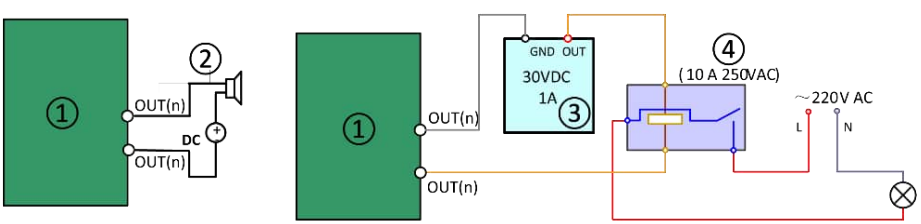

① Relay output
② DC load
③ Power supply
④ JQC-3FG Relay

Protective Measures for Outdoor Installation

Activate and Access Network Camera

See Far, Go Further

UD44193B-A