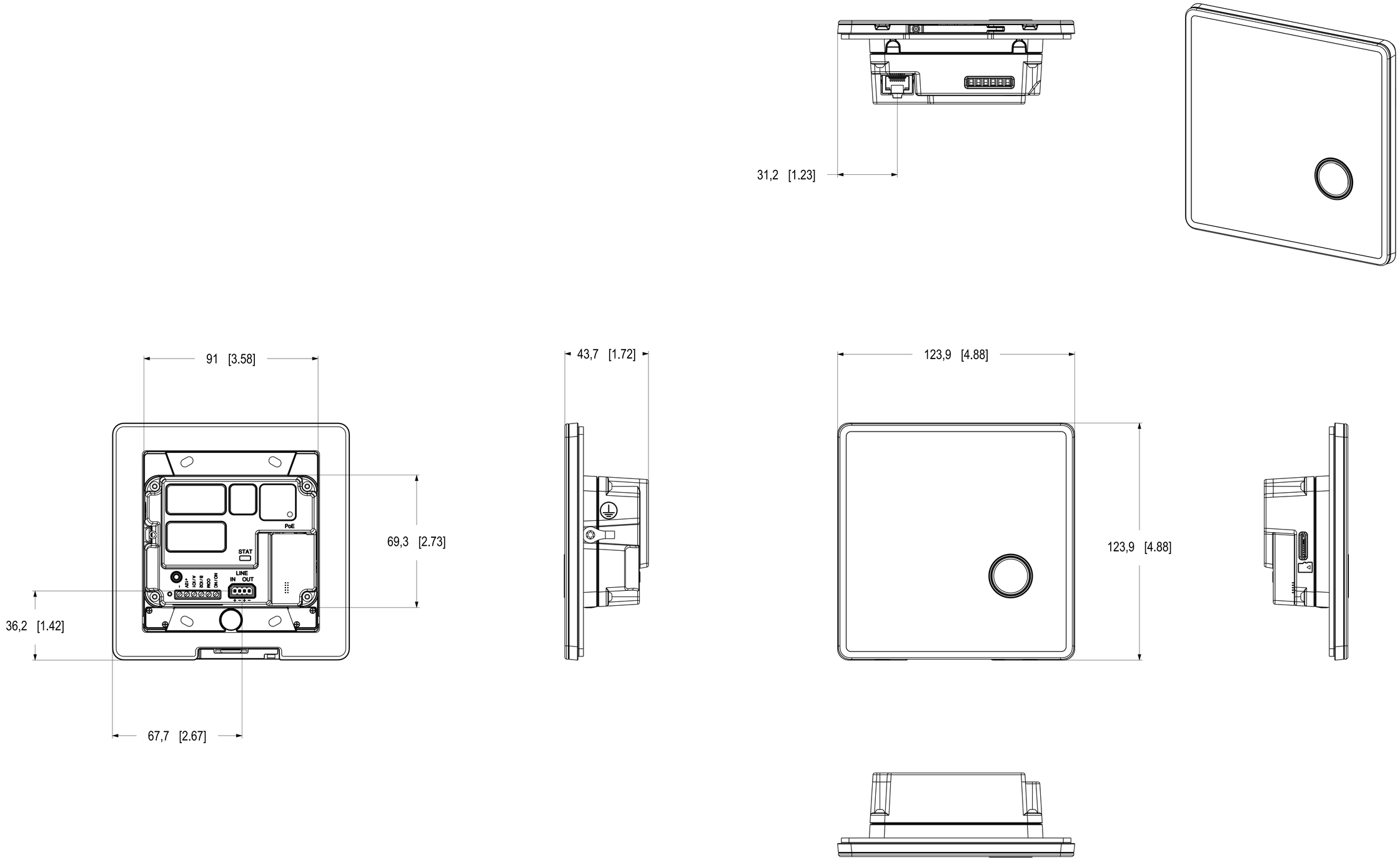

AXIS COMMUNICATIONS

© 2024 Axis Communications AB. All rights reserved.

AXIS I7020 Network Intercom

Dimensions in mm [inch]

Date	Version	Scale
2024 Oct-25	M1.1	1:1
Drawing Number	Size	Sheet
3181517	A1	1(1)