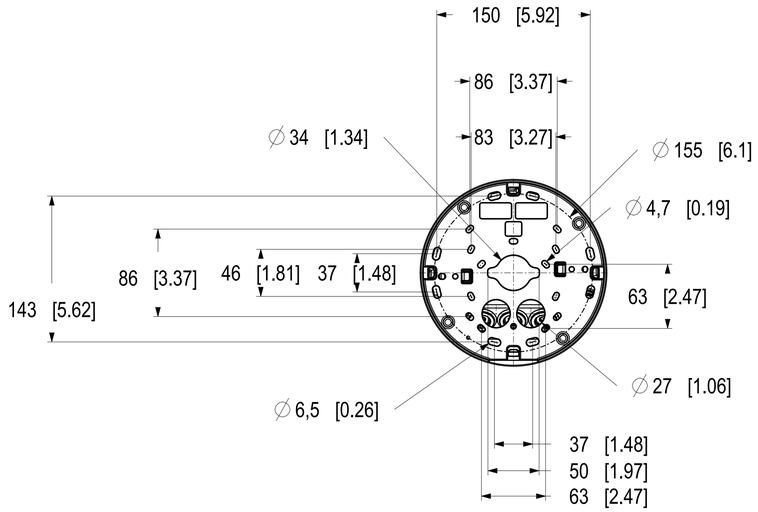

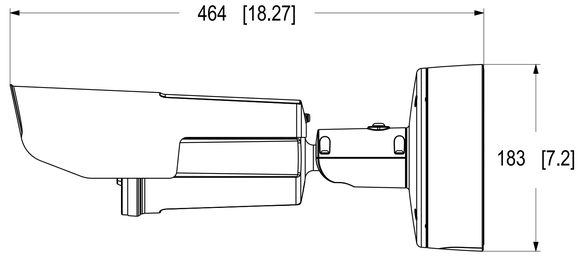

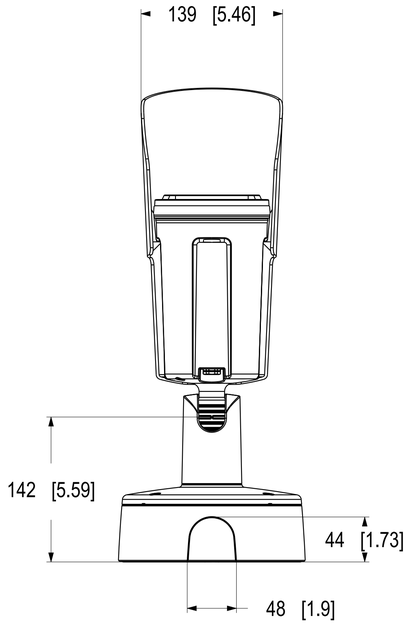

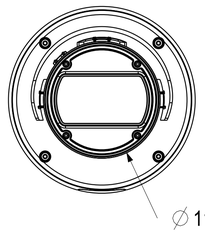

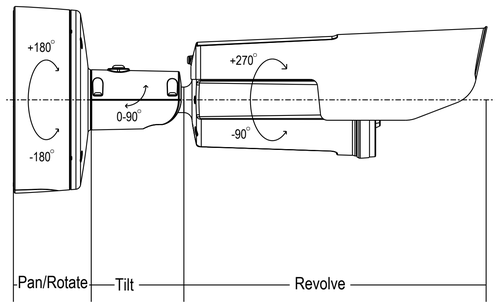

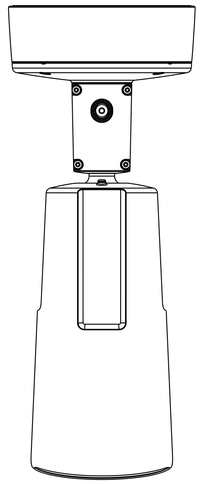

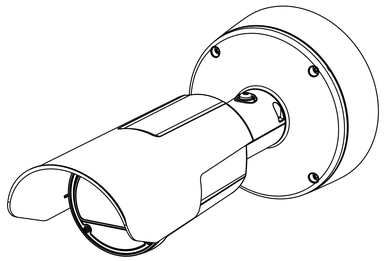

Dimensions in mm [inch]

Date	Version	Scale
2024 Oct-16	M1.1	1:3
Drawing Number	Size	Sheet
3170207	A1	1(1)

AXIS Q1800-LE-3 License Plate Verifier Kit

© 2024 Axis Communications AB. All rights reserved.