AW-GEV-184B-250 PoE Switch
Quick Installation Guide

INTRODUCTION

The AW-GEV-184B-250 is a 16 port 10/100/1000BaseT web smart PoE switch capable of feeding 15.4/30W (54V max. per port) power to Power over Ethernet (PoE) devices. It provides a reliable infrastructure for your business network and deliver intellilgent features. Moreover, this switch also comes with the functionality specifically designed for managing VIVOTEK's IP cameras and for a quick access to connected devices.

PACKAGE CONTENTS

* 1x PoE switch	* 1x Quick Installation Guide
* 2x rack mount ears	* 1x power cord (type by the shipped-to area)
* 1x CD-ROM	

⚠ IMPORTANT:

1. Install the PoE switch in a ventilated and dry place that is free of electromagnetic source, vibration, moisture, and dust.
2. Make sure the ventilation openings on the switch are not blocked.
3. Use CAT5 or 5e UTP/STP cables.
4. AC input (100~240V/AC, 50~60Hz), for a max. consumption of 280W.

CONNECTION

Front Panel

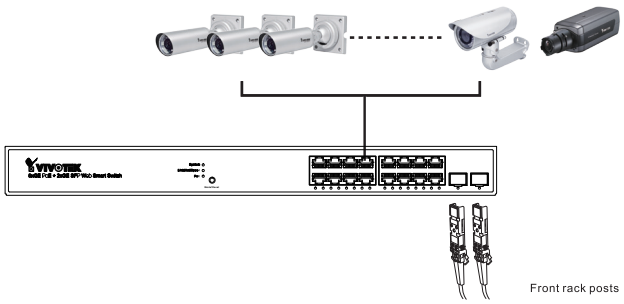

Rear Panel

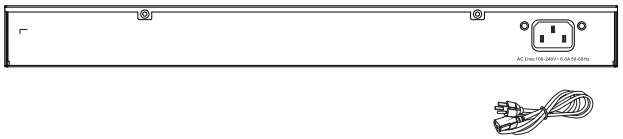

Front rack posts

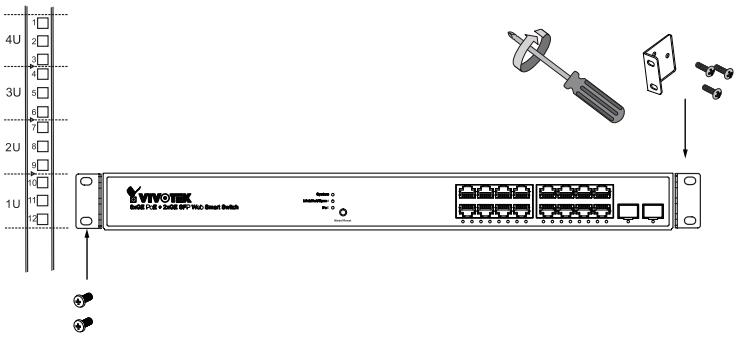

DEFAULTS

IP Address	DHCP client
User name	admin
Password	admin

LED DEFINITIONS

System	Green ON	Power is on and normal.
	Green Off	The switch is not receiving power.
	Red ON	An abnormal state, such as exceeding operation temperature, has been detected in the switch.
Link/Act/Speed	Green ON	The port Status LEDs displaying link status, network activities, and speed on each port.
PoE	Green ON	The RJ45 port status LEDs display PoE powering statuses on each port.
RJ45 ports SFP ports	Green ON	Port is enabled and link established with a device at the 1000Mbps speed.
	Grren Blinking	Port is transmitting and receiving data at the 1000Mbps speed.
	Amber ON	Port is enabled and link established with a device at the 100Mbps speed.
	Amber Blinking	Port is transmitting and receiving data at the 100Mbps speed.
PoE Mode RJ45 ports	Green ON	Port is enabled and supplying power to PD.
	Amber ON	An abnormal state detected, such as overload.

Mode/Reset Button

Task	Press time	System LED Behavior	Port Status LED Behavior
Change LED Mode	0 ~ 2 seconds	Green ON	LED status will be changed according to the mode selected
Restart	2 ~ 7 seconds	Green blinking	All LEDs are off
Restore defaults	7 ~ 12 seconds	Green blinking	All LEDs stay ON

All specifications are subject to change without noice.
Copyright © 2016 VIVOTEK INC. All rights reserved.

VIVOTEK INC.
6F, No.192, Lien-Cheng Rd., Chung-Ho, New Taipei City, 235, Taiwan, R.O.C.
| T: +886-2-82455282 | F: +886-2-82455532 | E: sales@vivotek.com

VIVOTEK USA, INC.
2050 Ringwood Avenue, San Jose, CA 95131
| T: 408-773-8686 | F: 408-773-8298 | E: salesusa@vivotek.com

VIVOTEK Europe
Randstad 22-133, 1316BW Almere, The Netherlands
T: +31(0)36-5298-434 E: saleseurope@vivotek.com